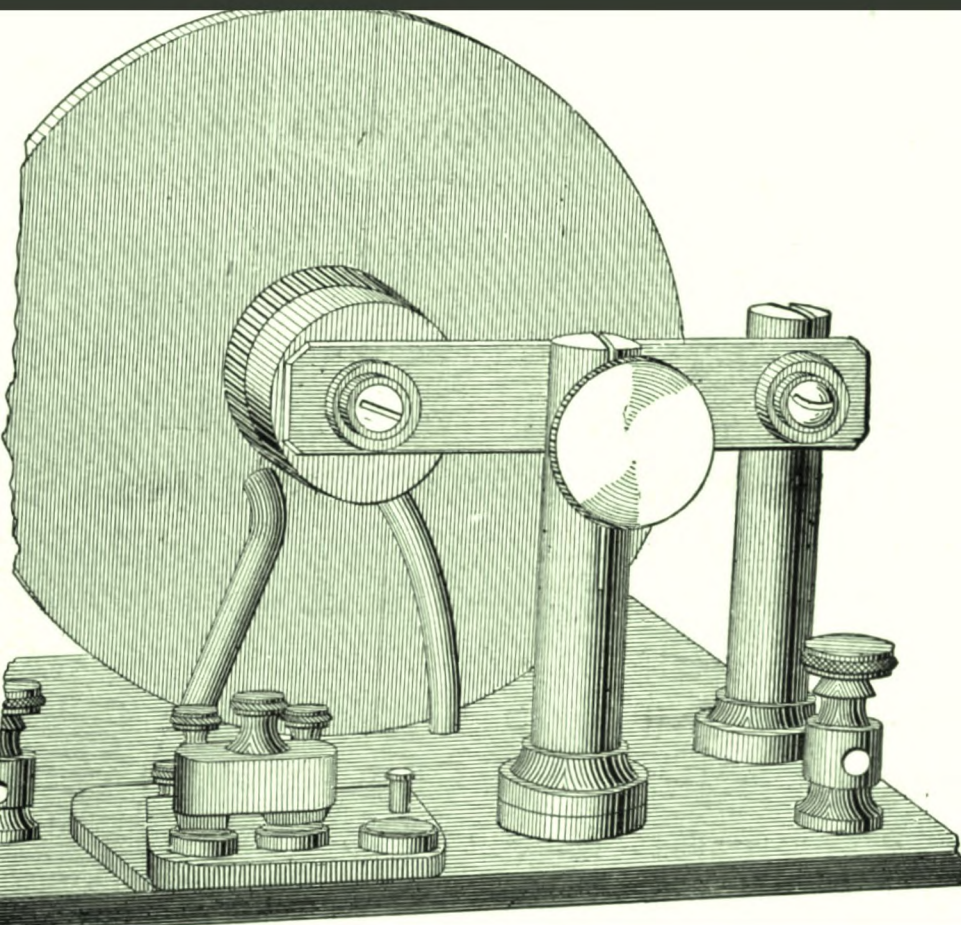

Manual of wireless telegraphy and telephony

Archie Frederick Collins

Digitized by Google

Library
of the
University of Wisconsin

Digitized by Google

Digitized by Google

Digitized by Google

MANUAL OF

Wireless Telegraphy and Telephony

BY

A. FREDERICK COLLINS

THIRD EDITION, REVISED AND ENLARGED
FIRST THOUSAND

NEW YORK
JOHN WILEY & SONS
London: CHAPMAN & HALL, LIMITED
1913

Digitized by Google

Copyright, 1906, 1909, 1913
BY
A. FREDERICK COLLINS

(First Edition Entered at Stationers' Hall)

THE SCIENTIFIC PRESS
ROBERT DRUMMOND AND COMPANY
BROOKLYN, N. Y.

Digitized by Google

AWG 6870

196405
JUL 12 1915
TQ11
.C69
M

PREFACE TO THE THIRD EDITION

THE tremendous strides in wireless during the past ten years have necessitated a revision of this Manual. In the matter of improved apparatus the alternating current transformer has largely taken the place of the induction coil and the auto receptor has all but superseded the coherer receptor in practical installations, with the result that both the working and the efficiency of stations have been greatly improved.

Due to these and other advances it has been found expedient to segregate the chapter on *The Apparatus of a Commercial Station* and treat the transmitting and the receiving instruments separately. Aerials is a subject to which much new text has been added since the *flat-tops* or *T* aerial has come into general use together with better methods of suspension than those treated of in the previous editions of this Manual. Furthermore, considerable useful data have been appended under the caption of *Suggestions to Operators* relating to the management of stations.

On the other hand the list of stations of the various operating companies and the Army and the Navy has

Digitized by Google

been omitted as being unnecessary, since the U. S. Government Printing Office publishes a booklet giving the names, locations, call letters, wave lengths, and types of apparatus of all ship and shore stations.

A. F. C.

THE ANTLERS, CONGERS, N. Y.
January 1, 1913.

Digitized by Google

PREFACE TO THE SECOND EDITION

SINCE the publication of the first edition of Mr. Collins' Manual of Wireless Telegraphy the newer art of transmitting articulate speech without wires has been reduced to commercial practice.

Wireless telephony employs electric waves as does wireless telegraphy, but the means for producing these waves, as well as their characteristics, are quite different, and in order to bring out the salient features there is appended in this edition a clearly and concisely written treatise by Mr. Newton Harrison.

By a careful perusal of the appended text the wireless operator will obtain a fair working knowledge of the construction and operation of the wireless telephone, and since the new apparatus is rapidly coming into general use this information should prove of great value.

August 1, 1909.

Digitized by Google

Digitized by Google

PREFACE TO THE FIRST EDITION

As every one interested in wireless telegraphy is aware, there are numerous books on the subject; but while this is true, there is very little information available for those who are, or who desire to become, operators.

In preparing this manual my purpose has been to give detailed and explicit instructions for wiring the various types of sending and receiving apparatus now in general use, the adjustment of the instruments, tuning and syntonizing the circuits, testing the devices, and finally the management of ship and shore stations.

The most proficient operators are those who combine theory with practice, and if the principles involved in the system he is working are clearly understood, the adjustment and manipulation of a set will be rendered much easier than where the results are striven for blindly. Hence if this book is carefully studied and the instructions are faithfully followed, many of the difficulties usually encountered can be easily overcome

Digitized by Google

or circumvented by the operator, and he will be able to send and receive messages with a greater degree of accuracy and over considerably longer distances than would otherwise be possible.

A. FREDERICK COLLINS.

THE ANTLERS, CONGERS, N. Y.
August 1, 1906.

Digitized by Google

CONTENTS

CHAPTER I

PAGE

A Simple Wireless Telegraph System 1
Diagram of a Simple Transmitter 2
" " " " Coherer Receptor 4
" " " " Auto-detector Receptor 8
An experimental Transmitter 8
" " Coherer Receptor 10
" " Auto-detector Receptor 14

CHAPTER II

Elementary Theory 19
First Principles 19
Direct Current 20
Alternating Currents 22
Electric Charges 23
" Sparks 24
" Oscillations 27
" Waves 30
Propagation of Electric Waves 31
The Ether 35
Constants of the Oscillation Circuit 37
(*a*) Resistance 37
(*b*) Capacity 38
(*c*) Inductance 39
Open and Closed Oscillation Circuits 40
(*a*) Conductively Coupled Oscillation Circuits 41
(*b*) Inductively " " " 42

Digitized by Google

CHAPTER III

PAGE

APPARATUS OF A COMMERCIAL STATION 44
Sending Instruments 44
Sources of Current 44
Morse Keys 45
(a) Key for Coherer Receptor 45
(b) Key for Auto-detector Receptor 46
Low-voltage Meters 47
The Induction Coil 47
Interruptors 48
(a) Spring Interruptor 48
(b) Mercury Turbine Interruptor 50
(c) Electrolytic Interruptor 52
The Condenser 52
The Transformer 54
(a) Open Coil Transformer 54
(b) Closed Coil Transformer 54
Resistance and Impedance Coils 56
Spark-Gaps 56
High Tension Condensers 58
(a) Leyden-jar Battery 58
(b) Glass Plate Battery 58
Inductance Coils 58
(a) Conductive Coil 58
(b) Inductive Coils 58
Aerial Switch 60
Anchor Gaps 61
Hot-wire Ammeter 61

CHAPTER IV

APPARATUS OF A COMMERCIAL STATION 63
Receiving Instruments 63
The Coherer Receptor 63
(a) Coherer 63
(b) Tuning Coil 64
(c) Non-inductive Resistance 64
(d) Condenser 65
(e) Relays 65

Digitized by Google

PAGE

(*f*) Tappers or De-coherers 67
(*g*) Morse Registers 67
(*h*) Choking Coils 68
(*i*) Polarized Cells 68
(*j*) Dry Cells 69
Instruments:
(*a*) Relay Testing-coil 69
(*b*) Tuning Device 69
(*c*) Testing Box or Buzzer 70
Auto-detector Receptors 71
Magnetic Detector Receptor 71
(*a*) The Detector 71
(*b*) Tuning Coil 72
(*c*) Variable Condenser 72
(*d*) Telephone Receivers 74
Crystal Detector Receptors 74
(*a*) Crystal Detectors 74
(*b*) Fixed Condenser 76
(*c*) Tuning Coil 76
(*d*) Variable Condenser 76
(*e*) Telephone Receivers 76
Electrolytic Detector Receptor 76
(*a*) Electrolytic Detector 76
(*b*) Tuning Transformer 76
(*c*) Variable Condenser 76
(*d*) Potentiometer 76
(*e*) Dry Cells 76
(*f*) Condensers 78
(*g*) Telephone Receivers 78

CHAPTER V

THE AERIAL WIRE SYSTEM 79
The Signalling Distance 79
The Aerial Wire 81
Types of Aerials 82
(*a*) Straight Vertical Aerial 82
(*b*) Oblique Aerial 82
(*c*) Flat Top, or T Aerial 82
(*d*) Umbrella Aerial 85

Digitized by Google

PA

The Mast 86
Portable Mast 92
Methods of Suspension 93
(a) Simple Methods of Suspension 93
(b) Commercial Methods of Suspension 93
Leading-in Insulator 95
The Grounded Terminal 96
The Operating Room 98
Aerial Wires and Grounds for Field Work 101
(a) Balloons 101
(b) Kites 101

CHAPTER VI

WIRING DIAGRAMS FOR TRANSMITTERS 105

Wiring Diagrams of Ordinary Induction Coil Interruptor and Condenser 106
Wiring Diagram of Induction Coil with Independent Spring Interruptor 107
" " " " " " Mercury Turbine Interruptor 109
Induction Coil with Electrolytic Interruptor 110
Keys 110
(a) Key with Condenser 111
(b) " " Magnetic Blow-out 111
(c) " " Oil Break 112
Diagram of Simple Induction Coil Transmitter 112
" " " Transformer Transmitter 112
" " Primary or Low Tension Circuits 114
" " Conductive-coupled Oscillation Circuits 114
" " Inductive-coupled Oscillation Circuits 115
" " a Complete Telefunken Transmitter 116
" " " " Marconi Transmitter 118

Digitized by Google

CHAPTER VII

PAGE

WIRING DIAGRAMS FOR RECEPTORS....
Circuit Connections.... 121
Diagram of Simple Open-circuit Resonator.... 122
Elementary Diagram of Detector and Cell Circuit.... 122
Diagram of Conductive-Coupled Resonator.... 124
" " Inductive-coupled Resonator.... 126
Wiring Diagram of Relay Connections.... 126
" " " Aerial Wire System, Coherer, and Relay Circuits.... 127
" " " Internal Circuits.... 131
" " " Complete Receptor.... 132
" " " Receptor with Magnetic Detector.... 132
" " " " " Electrolytic and Crystal Detectors.... 135

CHAPTER VIII

THE APPARATUS IN ACTION.... 139
Action of an Induction Coil.... 139
" " a Transformer.... 143
" " " Simple Sending System.... 144
" " " " Conductive-coupled Sending System.... 146
" " an Inductive-coupled Sending System.... 148
" " a Receiving System.... 150
" " " Conductive-coupled Receiving System.... 150
" " " Coherer.... 153
" " " Polarized Relay.... 153
" " " Tapper.... 153
" " " Morse Register.... 154
" " an Electrolytic Detector.... 154
" " a Magnetic Detector.... 155
" " " Crystal Detector.... 155

Digitized by Google

CHAPTER IX

PAGE

ADJUSTING AND OPERATING THE INSTRUMENTS 157
Notes on Adjusting 157
Adjustment of Instruments in the Primary Circuit 158
Adjusting the Spark-gap 160
To Tune a Coupled Transmitter 160
" " to Emit a Given Wave-length 162
" " a Coherer Receptor 167
Adjustment of Receiving Instruments 169
(*a*) Coherer 169
(*b*) Relay 169
(*c*) Tapper 170
(*d*) Morse Register 170
Testing the Receptor 173
Adjustment of Electrolytic Receptor 173
" " Magnetic Detector 174
" " Crystal Detector 174
Learning the Alphabetic Codes 175
Wireless Telegraph Codes 176

CHAPTER X

DIFFERENT MAKES OF EQUIPMENT 177
The Marconi System 179
The Telefunken System 192
The Signal Corps, U. S. A., Portable Apparatus 194
The United System 206

CHAPTER XI

SUGGESTIONS TO OPERATORS 208
General Information 210
Rates for Wireless Messages 212
Marconi Stations Along the Atlantic Seaboard 214
Locating Ships in the Atlantic Ocean 215
Offices of the Marconi Company 216
List of U. S. Ship and Shore Stations 217

Digitized by Google

PAGE
Type of Apparatus Installed 217
U. S. Army Wireless Telegraph Stations 217
Where to Apply for Positions 218
Service Regulations for Commercial Operators 223
Instructions for Naval Operators 239
Distress Signals 242
Wireless Call Book 243

CHAPTER XII

WIRELESS TELEPHONY 244
Means for Producing Electric Waves 244
General Method Employed 245
The Transmitter 246
The Oscillation Arc 248
Application of Arc to Wireless Telephony 249
Theory of Oscillation Arc 251
Use of Magnetic Field 252
Oscillograph Tubes 252
The Receptor 259
Tests of Wireless Telephone 259

APPENDIX

LIST OF BOOKS ON WIRELESS TELEGRAPHY 261
GLOSSARY OF WIRELESS WORDS, TERMS, AND PHRASES 271
INDEX 281

Digitized by Google

Digitized by Google

MANUAL OF

WIRELESS TELEGRAPHY

CHAPTER I

A SIMPLE WIRELESS TELEGRAPH SYSTEM

A WIRELESS TELEGRAPH operator must not only be able to send and receive messages, but he must also be thoroughly familiar with the apparatus employed, so that should occasion require, as, for instance, when a new set arrives from the makers, he can install the instruments, adjust them to their maximum efficiency and sensitiveness, and overhaul them when they get out of order.

While a complete equipment of instruments such as is used for commercial work is more or less complicated to the beginner, if he will bear in mind that all the different types are evolved from and still retain the same simple original features that made wireless telegraphy possible, and that the improvements in the art are responsible for the additional arrangements, it will not

Digitized by Google

be difficult for him to grasp the more complex details after a simple system is understood.

Diagram of a Simple Transmitter.—For this reason careful study should be devoted to the following diagrams,

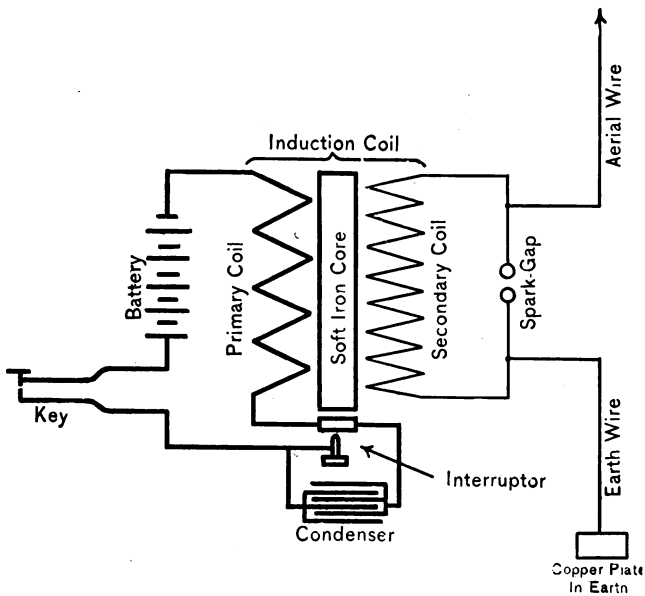

FIG. 1.—Transmitter of a Simple Wireless Telegraph System.

Figs. 1 and 2, or Figs. 1 and 3, which when taken together represent a wireless telegraph system in its simplest form; and having these well in mind it will be easy for the student to follow the connections of any system now in use, since all are merely modifications of one of the two fixed types.

By referring to Fig. 1 a diagram of the *transmitting apparatus* for sending wireless messages will be seen.

Digitized by Google

The different parts of the instrument are clearly marked, and it will be observed that the *aerial wire*—which is simply a bare copper wire suspended in the air by a mast, and insulated from it—is connected to one of the *spark-balls*, forming one side of the *spark-gap*. To the opposite spark-ball a similar copper wire is connected which leads to the earth and is there attached to a metal plate, usually of zinc or copper. This is termed the *ground-wire*. This part of the transmitter comprises the *oscillator system*, and in this case it is also called the *radiator*, since it radiates the energy into space.

On opposite sides of the spark-gap formed by the brass balls, or spheres, the terminals or ends of the wire of the *secondary coil* of an *induction coil* are connected. In the diagram the secondary is indicated by a fine zigzag line, since this coil is built up of fine wire. The circuit derived by connecting the secondary coil with the spark-gap is termed in wireless telegraph parlance the *charging system*. The *inductor*, or *primary coil* of the induction coil, is shown as a heavy zigzag line, and the ends of this coil are connected to a battery, or other source of electromotive force, and a telegraph key through the medium of an *interruptor*. This constitutes the *energizing system*. Although the primary and secondary coils are portions of different circuits or systems of the transmitter, they are allied very closely in the apparatus and together with the *interruptor* and its *condenser* make up the induction coil.

The battery connected to the primary coil generates

Digitized by Google

the initial current that flows through the circuit when it is closed, and it is this current that energizes the secondary coil which in turn charges the radiator system. A telegraph key is, of course, employed to break up the current from the battery that flows through the primary coil, into the alphabetic code of dots and dashes. The aerial wire and the earth-wire coupled through the spark-gap form an *open circuit*, for, as may be readily seen, they end abruptly; the secondary coil and the spark-gap connected together form a *closed* circuit, as well as the primary coil and its connections through the key and battery. Since the aerial and earth wires are located outside the station, the open circuit produced is sometimes termed the *external circuit*, while the primary and secondary circuits are likewise occasionally referred to as *internal circuits*, these being located within the station.

If the embryo operator will remember that the primary circuit, the secondary circuit, and the radiating system, i.e., the aerial and *ground* and the spark-gap, may be considered as distinct circuits, just as the fire-box, boiler, and engine may be treated as individual parts of a whole, he will be able to gain a clearer conception of the system formed when they are joined in combination.

Diagram of a Simple Coherer Receptor.—The *receptor*, as the entire receiving arrangement is designated, comprises, as Fig. 2 shows, a similar aerial wire and a similar ground-wire to those employed in the transmitter. The aerial wire is connected with one side of the *coherer*, the other side of which is *grounded*, by the wire leading to the

Digitized by Google

earthed metal plate. This forms an open circuit and is termed the *resonator system.* It corresponds to and receives the energy emitted by the radiator system. From opposite sides of the coherer wires lead to a dry cell

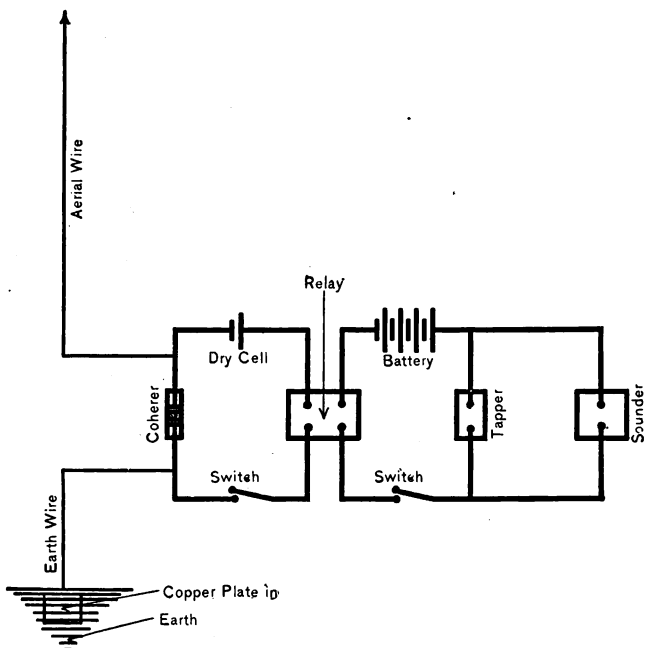

FIG. 2.—Diagram of a Simple Coherer Receptor.

and the magnets of a *relay*, and these are connected when a message is to be received through a small switch. A second circuit is provided by connecting the contact-points of the relay with a battery of dry cells and a buzzer, sounder, or Morse register which indicates the signals.

Digitized by Google

Across this circuit and parallel with it there is a vibrating *tapper* for decohering the filings of the coherer so that another impulse can be received.

When the energy radiated by the aerial wire of the sending station impinges upon the aerial wire of the receiving system the filings of the coherer are drawn together; when this action takes place the current from

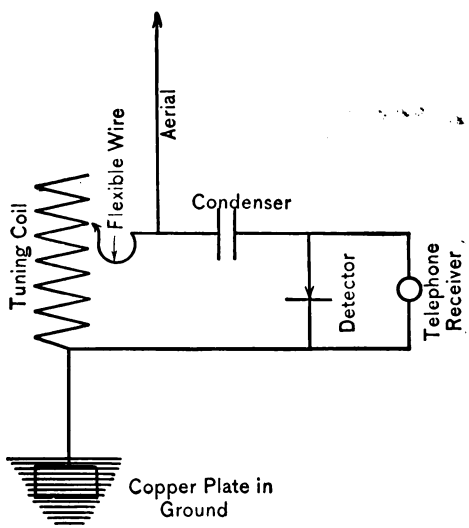

FIG. 3.—Diagram of a Simple Auto-detector Receptor.

the dry cell flows through the relay magnets, the *armature*, carrying a platinum point, is drawn down by magnetic attraction, and the stationary and movable points are brought into contact with each other, closing the circuits in which are inserted the Morse register or indicating device and the decohering tapper.

Digitized by Google

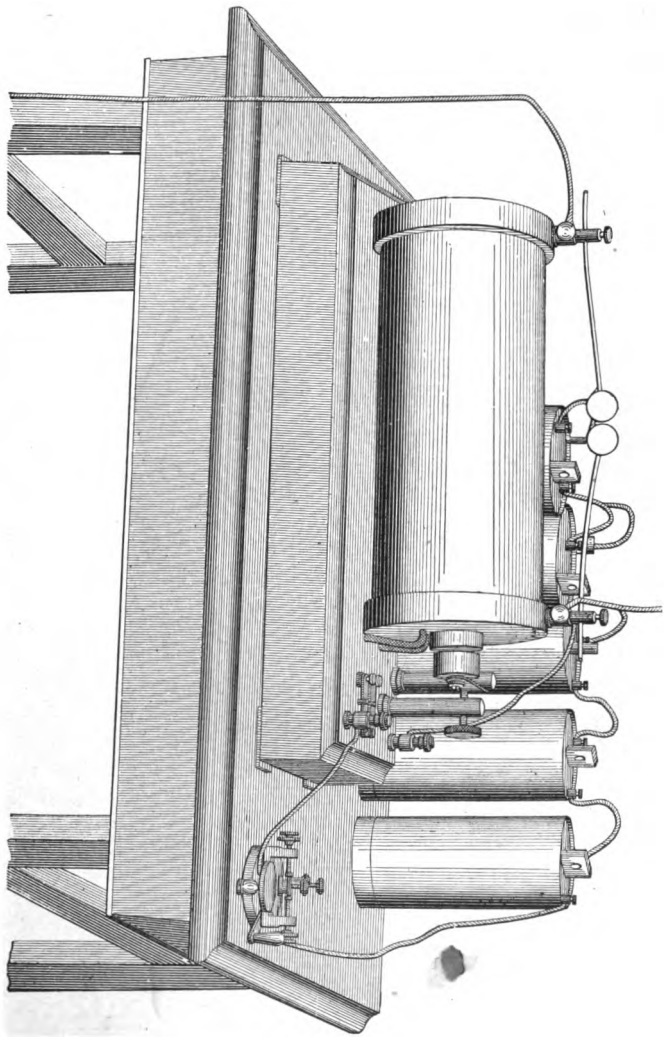

FIG. 4.—Simple Transmitter Complete.

Digitized by Google

Diagram of a Simple Auto-detector Receptor.—The accompanying diagram, Fig. 3, represents the simplest type of receptor and one capable of receiving messages over long distances. It is formed of an aerial wire connected to the *slide* of the *tuning coil.* The opposite end of the tuning coil leads to the *ground.* One side of a condenser is connected with the slide of the tuning coil and the opposite side of the condenser connects with one terminal of a *crystal detector*, while the other terminal of the detector connects with the ground wire. A telephone receiver is shunted around the detector as shown.

An Experimental Transmitter.—An experimental transmitter may be constructed at a small cost, and much valuable experience may be gained with it. An induction coil, or Ruhmkorff coil, giving a ½-inch spark, may be purchased from a dealer in electrical supplies for five or six dollars. A coil of this size will give excellent results for 50 or 100 feet without grounding the spark-gap of the transmitter or the detector of the receptor, but by merely placing the metal plates, which should be about 12 inches on the side, on the floor; aerial wires 12 or 15 feet in length should be provided, and suspended by insulators from the walls. Intervening objects, such as walls, windows, etc., will not interfere with the transmission of the waves and hence the sender and receiver can be placed in different rooms. This size coil with masts will also work satisfactorily over water a distance of ¼ to 1 mile if aerial wires 25 to 30 feet high, and rectangular earth-plates 3×4 feet on the side are used.

Digitized by Google

Having obtained the coil it will be necessary to provide the brass balls for the spark-gap as shown in the line cut, Fig. 4; the balls may be ½ or ¾ of an inch in diameter, and these are fitted to the coil by attaching stiff brass wires to them and through the binding posts that form the terminals of the secondary coil. An ordinary Morse telegraph key and a battery of six or eight dry cells connected in series with the primary posts of the induction coil completes the transmitter, except that of attaching the aerial and ground wires to the stiff wires carrying the spark-balls.

The coil is furnished with an *interruptor*, a device which automatically makes and breaks the current flowing through the primary coil when the key is depressed, and the *spring vibrator* must be so adjusted that when the telegraph key is open the stationary contact point just touches the bit of platinum soldered to the spring carrying the armature. The spark-gap balls should be so adjusted that they are not more than ¼ inch apart, as this gives much better results than when set at their greatest distance, namely, ½ inch, the reason being explained in the elementary theory to follow. The coil and the key should be mounted on a base of wood.

If the apparatus is to be used out-of-doors the aerial wires of both the sender and receptor must be suspended from the masts by glass insulators, or from a convenient pole projecting from a third- or fourth-story window or the top of a house, and the wire fastened to the opposite

Digitized by Google

side of the spark-gap to the sheet of metal embedded in the earth or immersed in the water, as the case may be. The sending and receiving wires leading from the instruments inside the station to the outside must be exceedingly well protected by glass or porcelain insulators from the building and mast or the high-tension energy

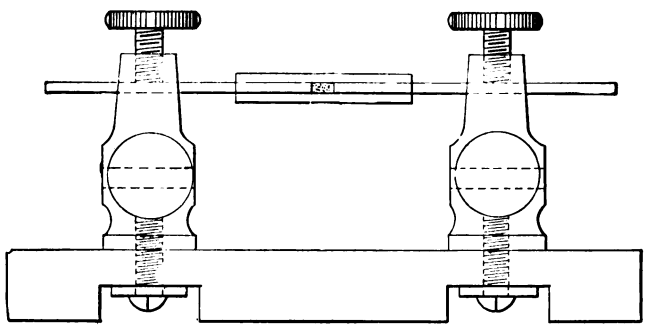

FIG. 5.—A Simple Coherer.

will be dissipated before it can send out effective waves.

An Experimental Coherer Receptor.—Nearly everything needed for the receptor can be purchased in the open market, unless it is the coherer; and this, besides being easily made, is well worth while for the experience gained. A simple one is made of two binding posts, having two set screws and two holes in each for the insertion of wires, and these are screwed to a base of wood 2 inches wide, 3 inches long, and $\frac{1}{2}$ inch thick at a distance of 2 inches, as shown in Fig. 5; two brass wires $\frac{1}{16}$ inch

Digitized by Google

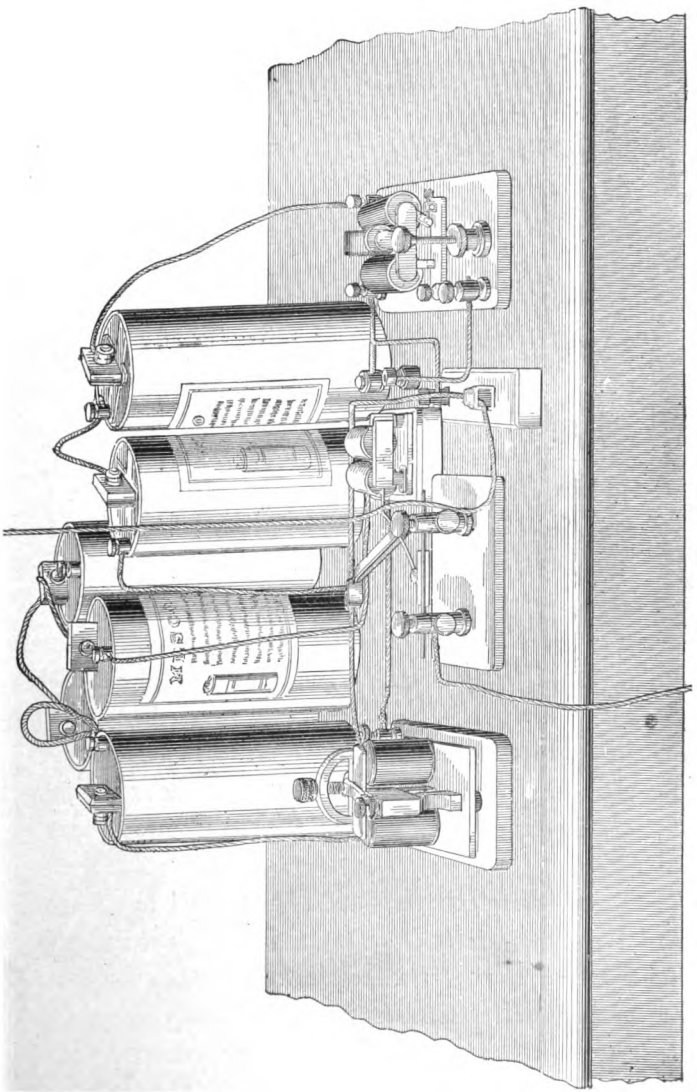

FIG. 6.—Simple Coherer Receptor Complete.

Digitized by Google

in diameter and 1½ inches long are inserted in the upper hole of each binding-post; these wires are termed *conductor-plugs* and fit snugly into a bit of glass tubing 1 inch long; before the plugs are inserted, however, a pinch of nickel and silver filings in equal proportions are placed in the tube; the filings are best made with a clean, coarse file, using a nickel five-cent piece and a silver dime.

The relay, known as a *pony relay*, is wound to a resistance of 150 ohms, and its cost is in the neighborhood of $2.50. Relays having a higher resistance can be purchased which makes them more sensitive, but the one mentioned will give excellent service. The tapper can be supplied by using an ordinary electric bell from which the gong has been removed. Instead of a Morse register, as is used in long distance sets and which cost about $40.00, a Morse telegraph sounder, costing $1.75, can be substituted, or what is even better and cheaper for the experimental set is a buzzer, costing only 50 cents. The resistance of the magnet coils of the buzzer and the tapper should be the same, though they are worked in parallel from the same battery. The resistance may be 4 ohms, the usual value, though if they are more it is not material. All these instruments may be purchased from a supply-house.

The base of the coherer should be screwed to a base-board large enough for the tapper, the relay, and the buzzer. The tapper is attached to the base-board so that the hammer, which is intended to tap the gong, will instead tap the glass tube of the coherer. The

Digitized by Google

relay may be placed conveniently on the right, and the buzzer or sounder, if the latter is used to indicate the signals, on the left, all being plainly shown in the photograph Fig. 6. The instruments should now be connected up as illustrated in the diagram Fig. 2; the aerial wire and the earth-wire are inserted in the upper holes of the coherer binding posts, as are also the ends of the wire that connects the coherer, the dry cell and the relay magnets.

The binding posts of the relay contacts are connected with the posts of the buzzer and dry battery of four cells, with the tapper connected in parallel. When the instruments are properly connected up it is best to test them in a room, with the sender and receptor not too far apart. To adjust the coherer and relay is the most difficult and tedious process involved in getting the instruments to work, and is only accomplished by practice and perseverance; by heeding the following suggestions, however, much time and trouble may be saved.

The screws of the relay are first adjusted so that the armature will have a free movement of only $\frac{1}{32}$ of an inch, and when the platinum point of the armature is drawn into contact with the stationary point the armature just clears the polar projections of the magnets. The tension of the coiled spring attached to the armature must be very feeble and only enough to draw the latter back from the magnets when there is no current flowing through them. This done, connect in the two dry cells with the coherer, through the switch; then unscrew one

Digitized by Google

of the conductor-plugs of the coherer and, gently twisting the wire, force it in the glass tube against the filings until the current begins to flow through the circuit and the magnets of the relay attract the armature. Tap the coherer with a pencil while adjusting to keep the filings decohered. When the proper balance is secured between the coherer and the relay, the latter should operate when the switch is closed, for the potential of the current from the dry cell is sufficient to cohere the filings, and when this takes place the relay will close the second circuit. Under these conditions if the key of the transmitter is pressed, a spark will pass between the spark-balls and the tapper and buzzer of the receptor will operate in unison with it.

An Experimental Auto-detector Receptor.—The apparatus for this receptor, like the preceding one, may be purchased from dealers in electrical supplies, or the student can make all the parts, except the telephone receiver, at little expense.

To make a tuning coil wind a layer of No. 20 single cotton-covered magnet wire on a cardboard tube 3 inches in diameter and 6 inches long. Coat the wire with shellac varnish and when dry scrape the insulation off $\frac{1}{4}$ inch wide the entire length of the coil. Make two hard-wood cheeks 4 inches on the side and bore a $\frac{1}{4}$-inch hole through the center of each. Now thread the ends of a $\frac{1}{8}$-inch brass rod having a length of $6\frac{3}{4}$ inches.

Put the wood cheeks on the tube, slip the rod through the holes and cylinder and on one end screw a nut, and

Digitized by Google

on the other a binding post. To the latter connect one of the ends of the coil of wire. To the top of the cheek screw another binding-post and to this secure a brass rod $\frac{3}{16}$ inch square and 7 inches long and bent as shown in the cut. Make a metal slide with a spring contact to fit over the rod which serves as a guide and the coil

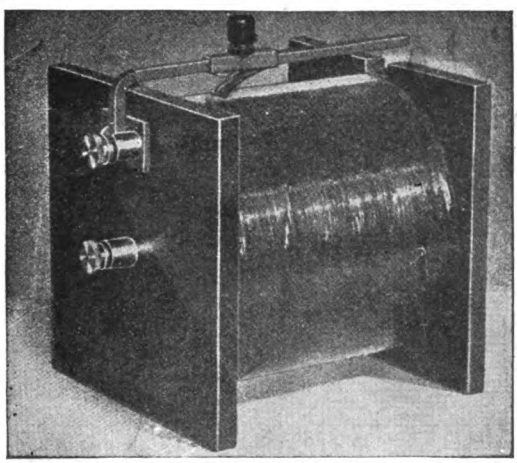

FIG. 7.—Single-slide Turning Coil.

is complete. The details of construction are clearly shown in Fig. 7.

The condenser is built up of 6 sheets of tin foil $1\frac{1}{2}$ inches wide and 2 inches long and separated with leaves of paper shellacked so that the alternate leaves of tin-foil project on the opposite side. Place in a small box and attach binding posts to the projecting ends.

A first-rate detector can be made by mounting on a

Digitized by Google

wood or hard rubber hase 3 by 4 inches on the side, a standard formed of two pieces of brass rod each of which is ¾ inch long. This permits the phosphor bronze spring to be mounted in the position shown in Fig. 8. On top of the standard a cross-bar is secured by a screw which also passes through the spring and screws into the lower

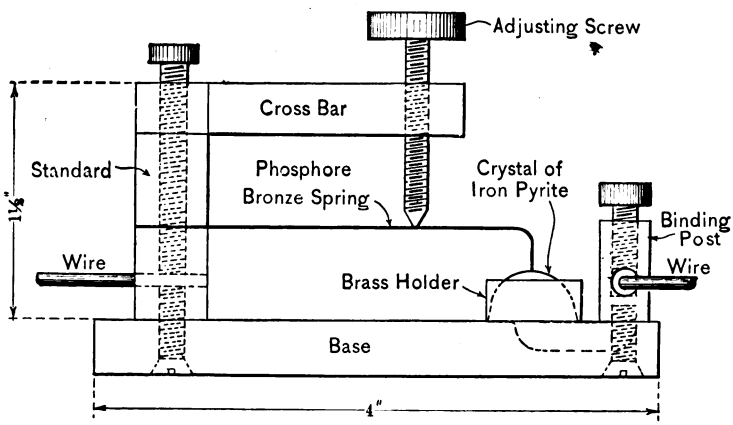

FIG. 8.—Simple Crystal Detector.

part of the standard. The spring is sharpened at its free end and bent over so that its point will rest on the crystal in the holder, which is connected with the binding post. A very fine adjustment may be had by turning the adjusting screw. Use a crystal of carborundum, iron pyrite or silicon. Procure a telephone receiver wound to as high a resistance as possible. No battery is required with this receptor. Hooked up in accordance with the

Digitized by Google

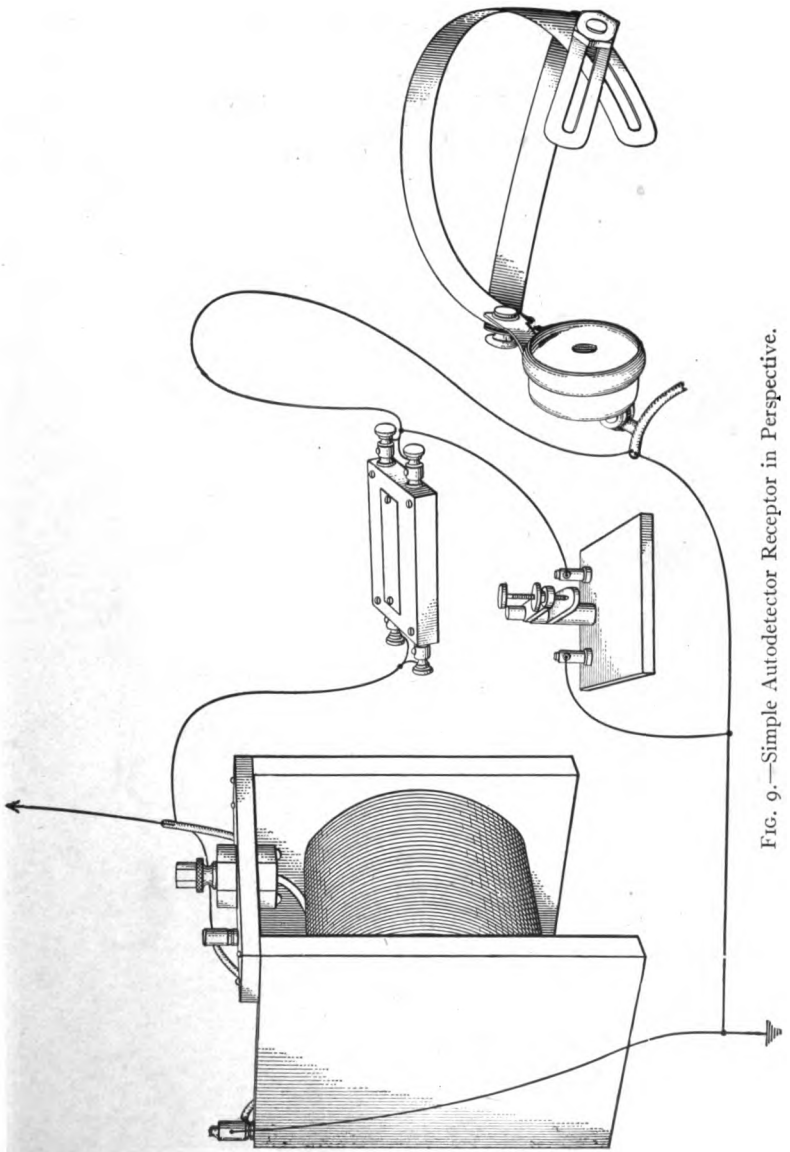

FIG. 9.—Simple Autodetector Receptor in Perspective.

Digitized by Google

diagram, Fig. 3, and adjust the detector until the incoming messages are loudest; now by moving the slide of the tuning coil to and fro the strength of the messages can be materially increased. Fig. 9 shows the auto-detector receptor set up and ready for use.

Digitized by Google

CHAPTER II

ELEMENTARY THEORY

First Principles.—In ordinary telegraphy a direct current generated by a battery or a dynamo is employed to send the alphabetic code over the wire, the dots and dashes being formed by making and breaking the circuit by means of a key. In the telephone a direct current is also employed as the initial source of energy, but this is transformed into an alternating current by a small induction coil before the undulations representing articulate speech are transmitted over the circuit. In the wireless telegraph a direct current is used primarily and this is transformed into alternating currents, when these are converted into oscillating currents and the latter are finally metamorphosed into electric waves which are then propagated through space. It will thus be observed that the principles underlying wireless telegraphy are more involved, and the apparatus for producing these changes of energy successively are more complex, than in ordinary telegraphy and telephony. If, however, the action of low-voltage direct and low-frequency alternating currents are mentally clear to the student, the phe-

Digitized by Google

nomena of electric oscillations and electric waves will follow logically and be easily understood.

Direct Current. — Electricity flowing continuously through a wire in one direction is termed a *direct current.* Such a current may be generated by a battery or a dynamo

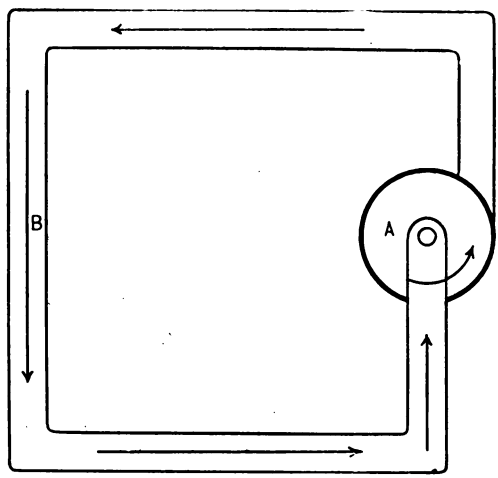

FIG. 10.—Hydraulic Analogue of a Direct Current.

and although there is no perceptible movement of matter along the circuit, yet the electricity flows through the molecules of wire very much as water flows through a pipe. The action of a direct current may therefore be graphically illustrated in the following manner: Let *A*, Fig. 10, represent a centrifugal pump, and *B* a continuous pipe connecting the outlet of the pump with its own inlet. If now the pipe and the pump are filled with water and the wheel of the pump is rotated, then obviously the

Digitized by Google

water will flow through the circuit in the direction indicated by the arrows. In order to cause the water to circulate, an expenditure of energy is of course required and hence the wheel of the pump must be connected to some external source of power.

Similarly, now, if one of the elements of a battery *A*, Fig. 11, is connected by a length of wire *B* to its opposite

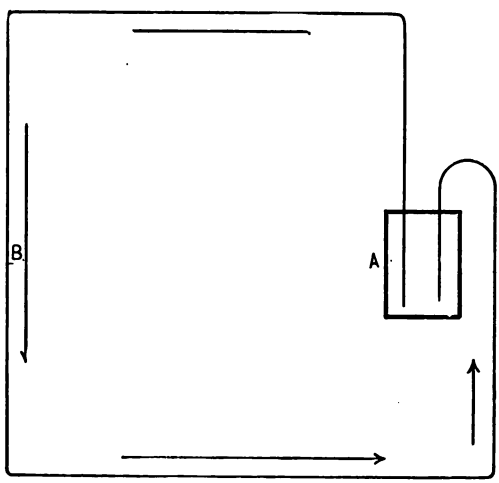

FIG. 11.—Direct Current Produced by a Voltaic Cell.

element, the chemical action of the battery will generate a continuous current, and this will flow through the wire circuit unidirectionally as the water flowed through the endless pipe. A direct current dynamo can be substituted for the battery, and the current generated by the coils of wire moving through the magnetic field will flow through the circuit as before.

Digitized by Google

Alternating Currents.—If the continuous water-pipe *B* is connected to a valveless reciprocating pump *A*, as indicated in Fig. 12, instead of the centrifugal pump shown in Fig. 10, the water in the pipe will obviously

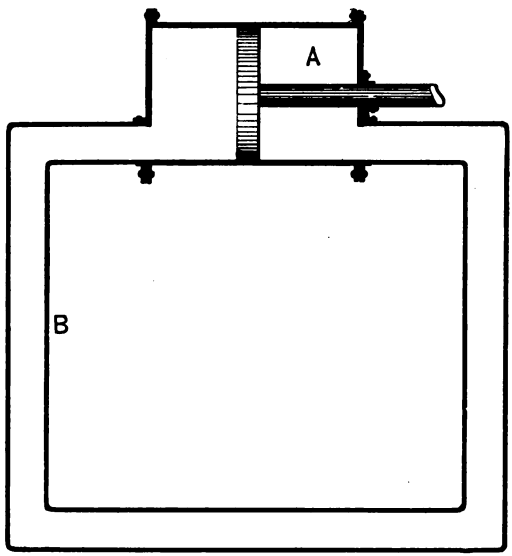

FIG. 12.—Hydraulic Analogue of an Alternating Current.

flow first in one direction and then in the other, alternating with every reversal of the piston.

Likewise if a wire *B* is attached to the secondary terminals *A* of an induction coil as in Fig. 13, the current flowing through it will move to and fro, alternating in its direction periodically. It is this low-frequency current that is employed to charge the oscillation system of a wireless telegraph transmitter. It is possible to

Digitized by Google

illustrate in a measure the transformation of an interrupted low-voltage direct current into alternating high-potential currents as produced by the induction coil, but the analogue becomes as intricate and difficult of comprehension as the electric action which it is intended to represent, and it must be borne in mind that hydraulic

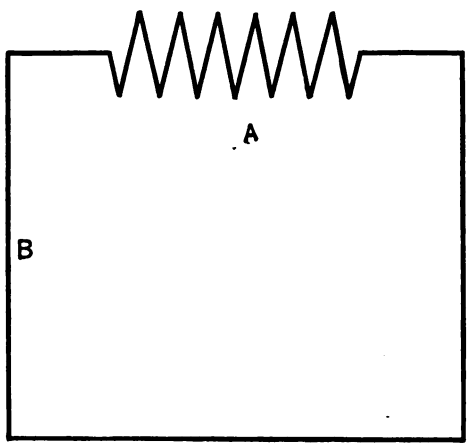

FIG. 13.—Alternating Current Produced by Secondary of an Induction Coil.

analogies must not be taken too literally, since with electricity there is no tangible transfer of matter.

Electric Charges.—When a Leyden jar is charged by an induction coil one of the coatings will be positively electrified and the other and opposite coating negatively electrified, the glass jar separating the two coatings of tin-foil forming an inductively insulating medium between them. When the high-potential currents produced at the terminals of the secondary of the induction coil,—and

Digitized by Google

these currents, which, as previously cited, are of an alternating character,—are impressed upon the aerial wire and the grounded wire, these receive and store up the energy exactly like the coatings of a Leyden jar; when these opposite arms or wires are changed to their maximum capacity and to the opposite signs, namely, positively and negatively, the charges rush together in their efforts to equalize the differences of potential and break down or disrupt the air-gap between the balls and a brilliant spark takes place.

Electric Sparks. — If it is desired to produce light-waves, it is only necessary to ignite some substance that will burn with a bright flame, as a pine knot or a stream of gas under pressure; or an electric current may be used to heat the filament of a lamp to incandescence or produce an arc between carbons; but the long invisible electric waves required in wireless telegraphy cannot be obtained in this manner. For many years prior to their discovery it was believed that waves of great length could be set up in the ether, but it was a matter of much speculation as to how to proceed. This and many other things that are of importance in sending and receiving wireless telegraph messages were ascertained by Heinrich Hertz, a young professor at Bonn University, Germany, in 1888.

The electric spark or *disruptive discharge* provides the means for setting the charged arms of the aerial-wire system into motion, when the energy thus released becomes oscillatory and is emitted as electric waves.

Digitized by Google

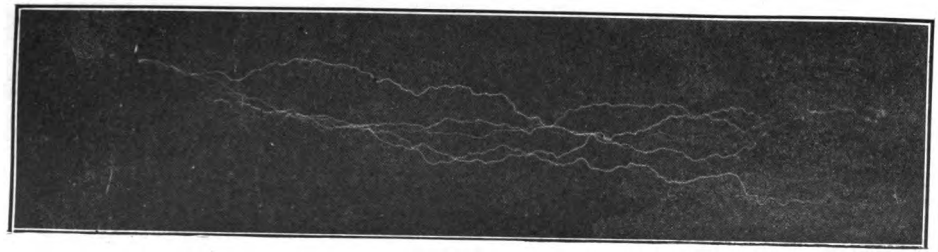

FIG. 14.—Long Thin Spark.

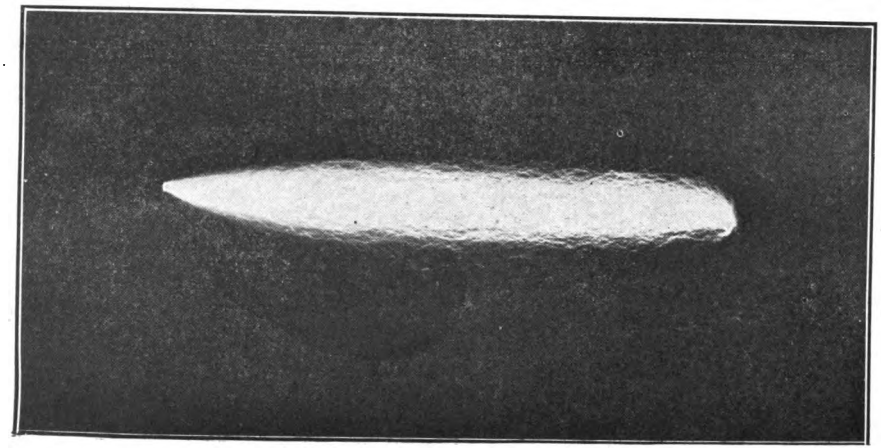

15.—Short Thick Spark.

Digitized by Google

Digitized by Google

There are many forms of the disruptive discharge from the long, attenuated, ribbon-like sparks shown in Fig. 14 to the thick, white, luminous discharge produced by passing the same amount of energy through a shorter spark-gap as shown in Fig. 15. The characteristics of the discharge are changed somewhat by the type of interruptor used; where the initial current is made and broken by a mechanical vibrating spring interruptor the spark is bright, zigzag in form, and gives forth a sharp, crackling sound when the oscillator-balls are not drawn too far apart, but if a Wehnelt electrolytic interruptor is used the discharge is less brilliant, its path arcuated, and its sound hissing.

The object of using balls at the spark-gap instead of points or disks is that the latter dissipates much of its energy in *brush discharges*, that is, electrified particles of air are thrown off especially from the positive terminal immediately the system is charged, and this greatly weakens the effectiveness of the succeeding disruptive discharge. Where balls are used there are no sharp points or edges to aid a brush or *convective discharge* and which reduces in this way the resistance the air offers to the passage of the current, but permits the charges of the oscillator system to reach their highest values before disruption occurs.

Electric Oscillations.—When a disruptive discharge takes place between the spark-balls of an oscillation circuit all the energy contained in the charge is not consumed in breaking down the air of the gap. On the

Digitized by Google

contrary a very small amount of the total charge of electricity thus set into motion is used for the purpose. What becomes of the rest of the charge that is not consumed? At the instant the spark springs across the gap it burns out the air and the heated particles that result provide almost as perfect a conductor for the high-tension current as though a copper wire connected the spark-balls. In other words, there is for the succeeding instant no longer a break in the oscillator system, but a practically continuous conductor is formed, and this being the case, the static charges, now combined in an active and pertinacious current under high pressure, rushes first to one end of the aerial wire, then back through the spark-gap, now of no appreciable resistance, thence to the end of the earth-wire, and repeats this process two or more times before its energy is damped out.

Surging high-potential currents of this kind are termed *electric oscillations*, and a clearer idea of why and how an electric current oscillates through an aerial and earthed-wire system when released by a disruptive discharge is shown in Fig. 16. Let *A* represent a balance having a lever of equal arms resting on a fixed knife-edge; *B*, Fig. 17, is understood to be an oscillator system charged by an induction coil. It will be observed that in one of the pans of the balance there is a small weight, and this draws one arm down while of course the other arm is raised proportionately, the resultant being a difference of level. In this case the force of gravity tends to equalize the two ends of the beam, bringing it to the same level.

Digitized by Google

If the weight is removed gently and gravity is permitted to equalize the difference of level slowly, the beam will

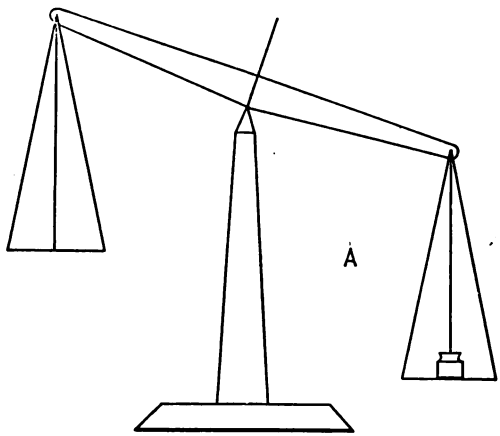

FIG. 16.—Analogue of Electric Oscillations.

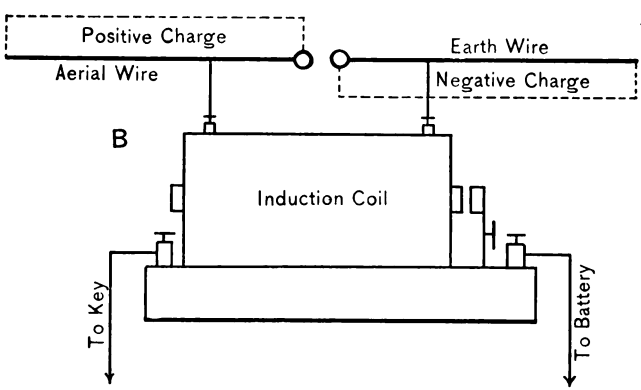

FIG. 17.—Diagram showing how Oscillations are Produced.

come to rest when the balance has been established and there will be no further movement; if, however, the

Digitized by Google

weight in the pan is removed quickly, the upper end of the beam will drive the lower end upward not only to its normal level but beyond, and then the process is reversed and the opposite end overshoots its level, and so several swings or oscillations of the beam will take place before it comes to rest.

Exactly so with electric oscillations in an aerial and earthed-wire system; before the disruptive discharge takes place, which is equivalent to removing the weight from the pan of the balance, one side is charged positively or, for the sake of following more closely the analogue above, it is high, and the opposite side negatively or low; under this condition the spark is produced releasing the pent-up energy of either arm, and these, now forming an electric current, seek to equalize the difference of potential and to restore the electric level. If the resistance of the spark-gap is not too great, the current will swing to and fro several times, or oscillate, before coming to rest.

The electric oscillations in a radiator system may range from 100,000 to 1,000,000 times per second, depending upon the electrical dimensions of the aerial and earthed wire, or its *inductance*, *capacity*, and *resistance*. In the case of the balance its physical properties determine the period or length of time of each oscillation. Likewise the electrical properties, namely inductance, capacity, and resistance, of an oscillator system determine the period of each oscillation of the surging current.

Electric Waves.—When an electric oscillation surges through the aerial system of a wireless telegraph

Digitized by Google

transmitter a small portion of its energy is used up by the various opposing forces or resistances which it has to overcome. But what becomes of that portion that is not required for this purpose? If a metal rod is heated, let us say, to redness, it will send out the energy impressed upon it in the form of waves in the air, and any object if not too far away will receive the transmitted waves and be heated to a certain extent by it. Similarly the aerial wire of an oscillator system will radiate the energy impressed upon it in the form of electric waves in the ether. These waves are emitted at right angles to the aerial wire, and like light and all other waves propagated by the ether they travel at a velocity of about 186,500 miles per second. The lengths of electric waves vary inversely with the period of oscillation producing them, and therefore to determine the wave-length it is only necessary to divide the velocity by the number of waves per second. The wave-lengths employed in wireless telegraphy are from 200 feet to one fourth of a mile, and to obtain the most efficient waves the period of oscillation must be in accord with the electrical properties of the radiating system where there are two oscillating circuits coupled together. Like light-waves, electric waves may be reflected, refracted, and polarized, provided the mirror, prism, or polarizing grid is of a size commensurate with the length of the waves.

Propagation of Electric Waves. — There are two theories to account for the manner in which electric waves traverse distances so great that the curvature of

Digitized by Google

the earth rises higher than the aerial wires. The writer believes the waves are in all essential respects like those of light, and that when two stations are located closely enough so that the sending and the receiving aerials are in a direct visual line the waves are propagated in a straight line, as shown in the diagram Fig. 18. If, on the other hand, the receiving aerial is so far distant from the sending station that the earth rises like a hill between them, then the electric waves travel onward until the higher strata of the air are reached, which act as a reflector, when their direction is then changed and they are propagated back to the earth's surface. This is termed the *free-wave theory.*

A second theory, and one much more widely held, accounts for their transmission over obstacles by assuming the electric waves to slide over the surface of the earth or sea. As the spark-gap of the oscillator system is located very near ground, considering the height of the radiating aerial, it is assumed that the waves are emitted only from this part of the system and are virtually cut in half as shown in Fig. 19, while the lower half of the waves would exist only as an image or reflection of the upper half. The earth or sea is not a perfect conductor, but is sufficiently so to permit the waves to skim over their surfaces. This is briefly the *sliding half-wave* theory of electric-wave propagation. Fortunately for those who practice wireless telegraphy these theories may be entirely ignored, for after the electric waves have left the radiating aerial until they again impinge

Digitized by Google

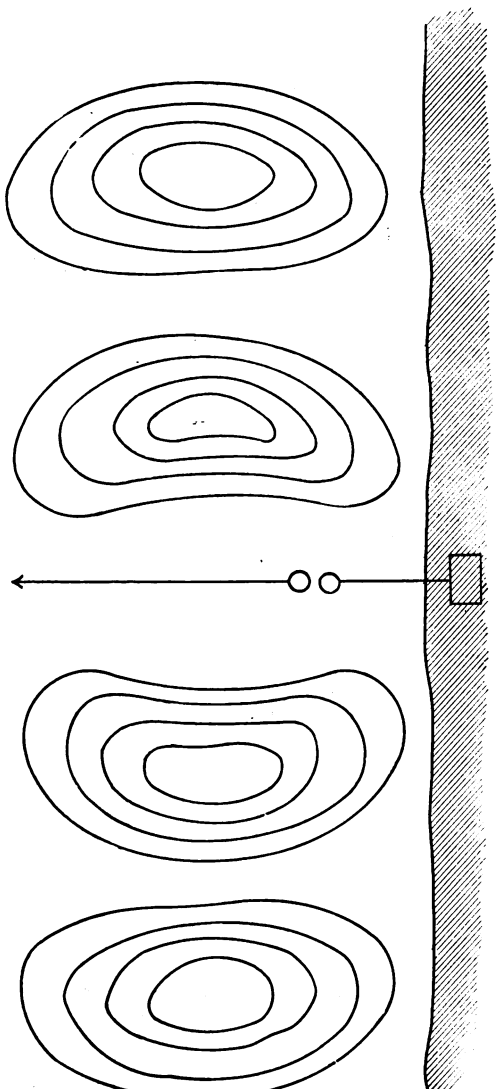

Fig. 18.—Free Electric Waves.

Digitized by Google

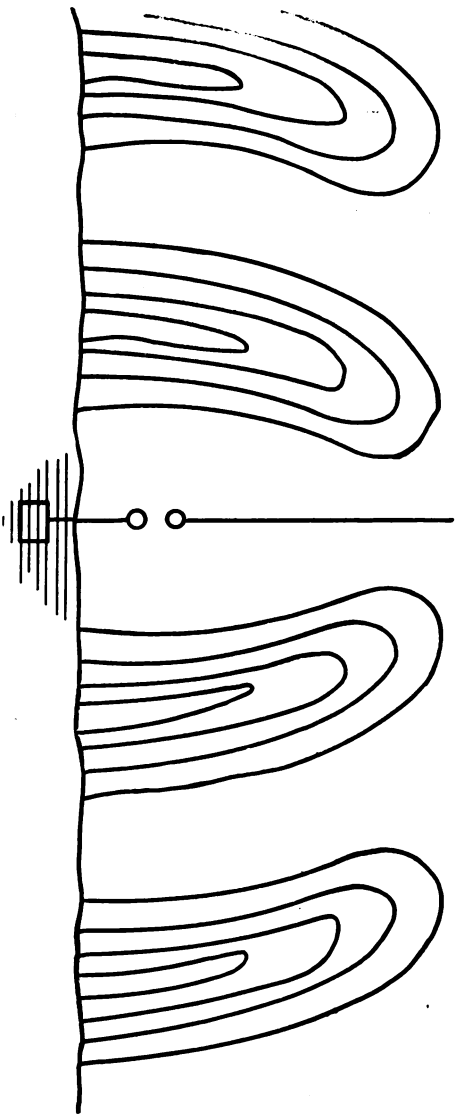

FIG. 19.—Sliding Electric Waves.

Digitized by Google

upon the receiving aerial they need not concern the operator.

The Ether.—It is impossible to say of what the ether is composed, but it is a substance that is fifteen trillion times lighter than the air, and when set into vibration produces and propagates light and all other electro-magnetic waves of whatever length. The following illustration may make its functions clearer.

When a message is sent from one station to another by wireless telegraphy the waves of course travel through the air; but, while this is true, the air really has nothing to do with their transmission. That is to say, the air cannot propagate electrical energy as it does mechanical energy. If a bell is rung in a vessel from which the air has been exhausted, its vibrations cannot be heard, for sound waves are conveyed through space by the particles of air; oppositely, if an incandescent light is placed in the vessel and a vacuum produced by means of an air-pump, its light will shine forth even better than if the air was present, for there is then nothing in the glass but the ether.

The source of light and the eye constitute in reality a wireless outfit, the first sending out trains of waves through the ether like a radiating aerial wire, and the eye receives them very much like a coherer; hence the latter is sometimes termed an electric eye. Light waves and waves sent out by a wireless transmitter are identical in every particular except that of wave-length, the first being excessively short and the last exceedingly long.

Digitized by Google

Light waves are produced by infinitely minute charges of electricity upon atomic matter that have been set into motion by the application of heat or by other means. These charges move with extreme rapidity, the slowest capable of impressing the human sight, vibrating 400 billion times per second, and the fastest 750 billion times per second; these vibrations send out in the first instance waves in the ether that approximate 271 ten-millionths of an inch in length, which gives us the sensation of red light, and in the last case, waves 165 ten-millionths of an inch in length, that are seen as violet light. If the electric charges vibrate faster than those giving violet light or slower than those producing red light, they are not visible, for the eye is not designed to receive them. Shorter waves than the visible violet give rise to ultra-violet radiations, and like those immediately lower than the visible red, or infra-red as they are termed, they are invisible. Yet the last-named waves may be measured by the ten-millionths of an inch.

When the length of the waves reaches a value approximating a thousandth of an inch, an inch, a foot, a rod, or a mile they can no longer be seen or felt, and their presence can only be indicated by some physical apparatus such as a coherer. Waves of this length are set up by oscillating currents surging on the surface of masses, such as wires instead of gaseous atoms, and it is the former we have to deal with in wireless telegraphy.

Digitized by Google

The Constants of the Oscillation Circuit.—These are its resistance, inductance, and capacity, and may be compared to the dimensions of a mass, hence they are sometimes referred to as the electrical dimensions of a circuit. These constants determine how the current shall be damped out and what its rate of oscillation shall be, as will be seen by a perusal of the following.

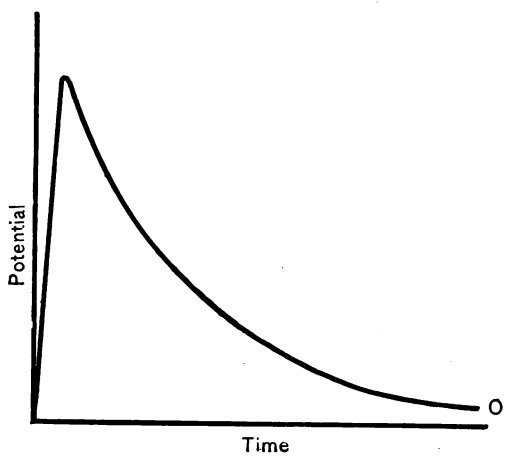

FIG. 20.—Electric Discharge through a Large Resistance.

Resistance.—It has been previously shown that the resistance of an oscillation circuit is practically negligible, and this is true when the length of the spark-gap is cut down to its proper working value. The resistance of the spark-gap may, however, be so great that the disruptive discharge will not set up an oscillating current but a *unidirectional current*, or a current flowing in one direction only, just as we have seen how the beam of a balance

Digitized by Google

may come to rest in a single swing. When an electric discharge takes place through a large resistance the current describes a smooth curve, as shown in Fig. 20; but when the discharge is through a small resistance, then it becomes periodic and oscillates until it reaches zero, as shown in Fig. 21. The unit of resistance is the *ohm*.

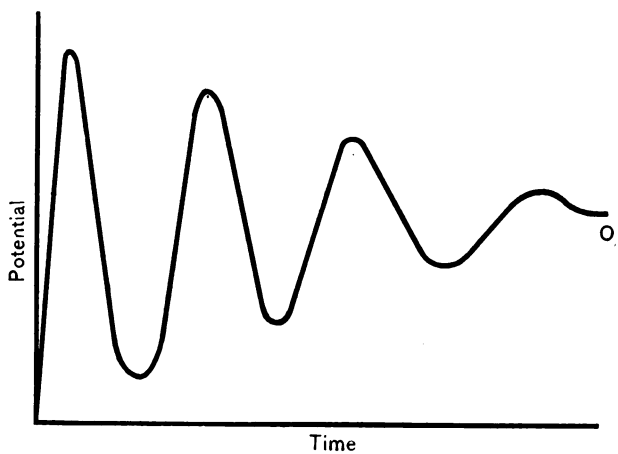

FIG. 21.—Electric Discharge through a Small Resistance.

Capacity.—The capacity of an oscillation circuit is its property to retain a charge of electricity, and to an extent where its pressure or potential is high enough to break down the air of the spark-gap. By increasing the capacity of the oscillation system, as by inserting a condenser or adding to the length or surface of the aerial wires, the energy of the oscillations may be increased, and of course in this way the effectiveness of the waves radiated will

Digitized by Google

be increased. Charging the aerial-wire system consists of distributing the high-potential active energy from the terminals of the secondary of an induction coil over the surface of the aerial and ground wires, the interposed spark-balls, and condenser and inductance coil, if these are included. The greater the capacity the slower will be the period of the oscillations, since the charging process must be repeated after each disruptive discharge. The unit of capacity is the *farad*, but, as this is too large for ordinary purposes, a *microfarad*, or one millionth of a farad, is used instead.

Inductance.—A current of electricity always requires a certain length of time to start and, once in motion, a certain length of time to stop. In this respect it is like the inertia of matter; for instance, a ball cannot put itself into motion, and when thrown into the air it has no power to stop, and would not if the resistance of the air and action of gravity did not combine to make it. Electricity acts similarly. The *self-induction*, as this property of the electric current is called, depends largely upon the form of the wire, that is, whether it is straight or coiled, and the material surrounding the circuit, though usually this is air and represents unity. The inductance of a circuit, like capacity, has the property of slowing down the oscillations. The value of the practical unit of inductance is the *henry;* the henry, like the farad, may be too great for convenience, when it may be expressed by some practical dimension, as a *millihenry*.

Digitized by Google

Open and Closed Oscillation Circuits. — In simple open-circuit systems where the spark-gap is placed directly between the aerial and grounded wires and the secondary terminals connected thereto, the constants of resistance, capacity, and inductance determine the period of oscillation and consequently the emitted wave-length,

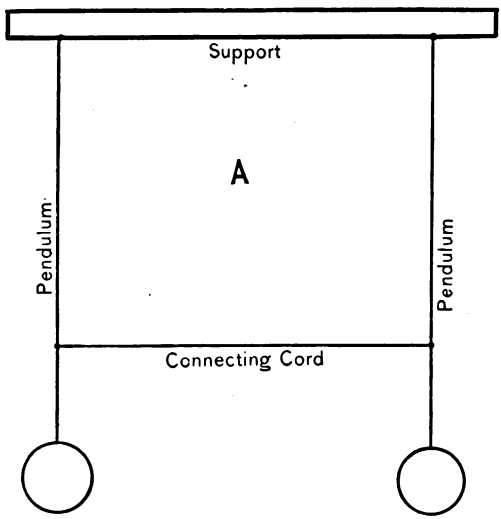

FIG. 22. — Analogue of Tuned Oscillation Circuits.

just as a piano-string will vibrate to its own natural period and send out sound-waves of a predetermined length. In all commercial systems there are two oscillation circuits and these are *coupled*, or connected together. Under these conditions the two circuits—a closed one and an open one—must be tuned to each other.

An analogous case is that of two pendulums, see dia-

Digitized by Google

gram Fig. 22, with the free ends connected by a cord. If the pendulums are of the same length, size, and weight, then they would swing, with the cord binding them together, in unison; but if one of the pendulums was shorter or lighter than the other, then their periods

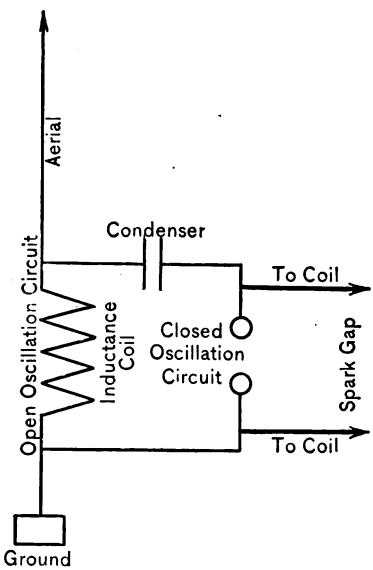

FIG. 23.—Conductively Coupled Oscillation Circuits.

of oscillation would vary, and if coupled together with a cord they would oppose each other, so that neither would swing normally; in other words, they would be out of phase, just as electric oscillations are when the circuits have different dimensions. In order that a larger amount of energy may be delivered to the radiating aerial and to better sustain the oscillations set up in it, commercial

Digitized by Google

installations have the open and closed oscillation circuits either (*a*) *conductively coupled*, or, (*b*) *inductively coupled* together.

In a conductive coupled system the open circuit is formed of the aerial and ground wires connected to the

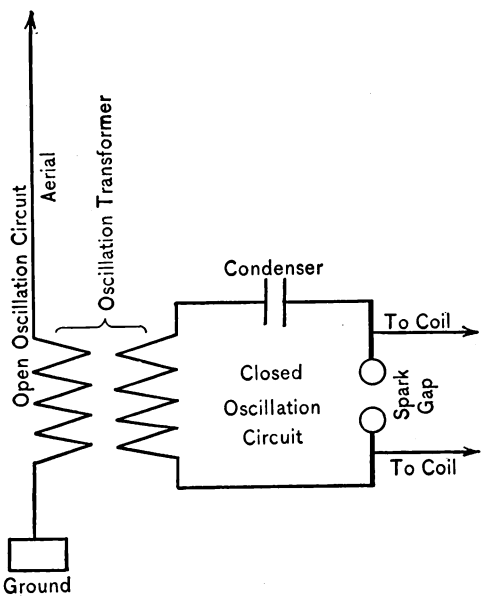

FIG. 24.—Inductively Coupled Oscillation Circuits.

tuning coil while the spark-gap and adjustable condenser are connected direct to the tuning coil as shown in Fig. 23.

In an inductive coupled system the aerial and ground wires are connected with the primary of an oscillation transformer, while the spark-gap and adjustable con-

Digitized by Google

denser are connected to the secondary coil of the transformer as in Fig. 24.

The spark-gap in this case is placed in the closed circuit, as is an *adjustable condenser* formed of a Leyden-jar battery and a *variable inductance coil.*

Before the disruptive discharge takes place the secondary of the induction coil charges the condenser until the potential is sufficient to break down the air-space of the spark-gap. When the spark passes the oscillating current surges through the closed circuit and in a direct-coupled system the energy of the oscillations reaches the open or aerial-wire system by conduction.

In an inductive-coupled system the energy of the oscillations in the closed circuit is transferred to the open or aerial-wire circuit by induction. From the aerial wire it is radiated into space as electric waves.

Like the pendulums in Fig. 22, the open and closed circuits must be in tune with each other so that the periods of oscillation of both may be identical. This is accomplished by changing the values of the inductance of the tuning coil or coils and of the condensers. To determine when the circuits are in tune a hot wire ammeter is placed in the aerial wire and the values of inductance and capacity are changed until the readings of the meter are maximum.

When receiving, the incoming electric waves impinge upon the aerial wire and the energy is converted into high-frequency oscillations in the open circuit and are either conductively or inductively impressed upon the closed circuit in which a detector is placed.

Digitized by Google

CHAPTER III

THE APPARATUS OF A COMMERCIAL STATION

Sending Instruments.—The apparatus required for sending commercial wireless telegraph messages comprises (*a*) a source of current, such as a primary or storage battery, a direct or an alternating-current dynamo; (*b*) an induction coil or a transformer; (*c*) a large current telegraph key; (*d*) a regulating resistance or a reactance coil; (*e*) a variable spark-gap; (*f*) an adjustable condenser such as a Leyden jar battery or a plate-glass condenser and (*g*) a variable tuning inductance coil.

Sources of Current.—(*a*) The only primary battery suitable for energizing induction coils is one formed of Edison cells. The type *S* cell develops 0.7 volt and has a capacity of 300 ampere hours. A battery of these cells does not deteriorate when not in use and requires no attention until the charge is completely exhausted.

(*b*) A storage battery is preferable to a battery of primary cells where a current is available for re-charging. The type known as the *chloride accumulator* will be found very satisfactory. This battery is serviceable for both portable and stationary work. Each cell has a capacity of $7\frac{1}{2}$ amperes for eight hours.

Digitized by Google

(*c*) Wherever a 110-volt current developed by a dynamo can be had it will give the best results. Where direct current only is available an induction coil must be used; where alternating current is obtainable a transformer will be required. An alternating current can be used to energize an induction coil by using an electrolytic or a mercury turbine interruptor in circuit therewith.

Morse Keys.—There are two types of telegraph keys

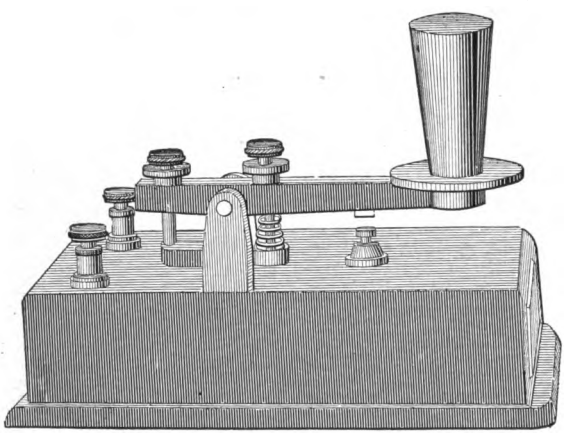

FIG. 25.—Wireless Key for Coherer Receptors.

used in wireless transmitters, and the one chosen must depend upon the kind of receptor that is used.

(*a*) The type of key used where a coherer and *Morse register* form the indicating apparatus of a receptor is shown in Fig. 25. It is a modified form of Morse key and is of large dimensions. The handle is of hard rubber; the lever is some five inches in length, and across the contact-points of the key, in some systems, a con-

Digitized by Google

denser is fitted to reduce the spark, while in others a *magnetic blowout* is provided for the same purpose. The blowout consists of an electromagnet with pointed poles placed at right angles to the contact-points. When the circuit is broken the current is shunted through the coils of the magnet and the magnetic field blows out the

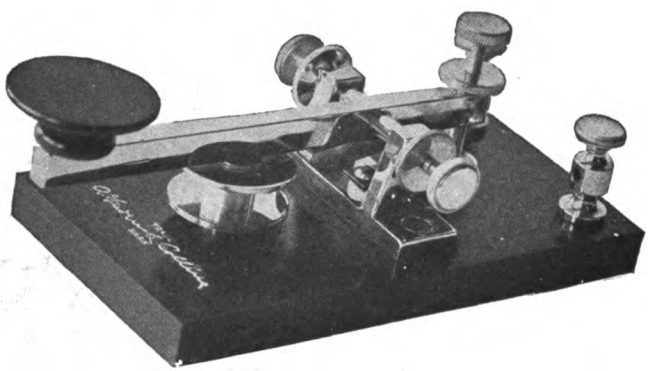

FIG. 26.—Wireless Key for Auto-Detector Receptors.

spark. A key of this type will break a current of 20 to 30 amperes continuously, but is designed for slow operation.

(*b*) Where an electrolytic or other auto-detector receptor is employed the key usually has the appearance of an ordinary Morse key for wire telegraphy. The former is, however, built on more generous lines and is provided with large platinum contacts, and where currents of over 20 amperes are to be broken the contacts are fitted with thin brass rings which radiate the heat. For currents

Digitized by Google

of over 20 amperes a condenser is shunted around the contact-points. This type of key, shown in Fig. 26, is capable of very rapid manipulation.

Low-voltage Meters.—An ordinary ammeter and voltmeter are useful, though not always furnished, for determining the current and voltage of the primary circuit.

The Induction Coil.—Where the distance between the sending and receiving stations is not great the coil is

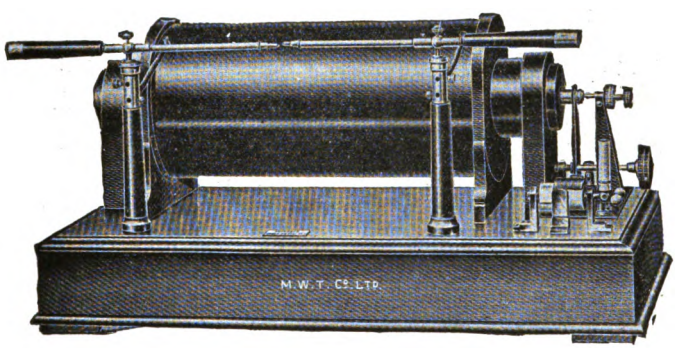

FIG. 27.—Marconi 10-inch Induction Coil.

generally provided with a vibrating spring interruptor mounted on the same base, while the interior of the base contains the condenser. Such a coil is shown in the experimental transmitter previously described, and coils of this type may be purchased in the open market in sizes ranging from those giving a $\frac{1}{2}$-inch to a 12-inch spark. Fig. 27 shows a Marconi 10-inch coil.

In the usual commercial systems the induction coil,

Digitized by Google

interruptor, and *condenser* are mounted separately. An induction coil proper consists of a *core* formed of a bundle of soft-iron wires, and upon this are wound two layers of heavy insulated wire termed the *primary coil*, or *inductor*, the ends of which are brought out and attached to binding-posts. The long fine insulated wire forming the *secondary coil* is wound around the primary coil but is, at the same time, carefully insulated by a tube of glass, hard rubber, pasteboard, or micanite. The ends of the secondary coil are connected to insulated binding-posts.

The secondary coil of a commercial transmitter is wound with a larger wire than the ordinary coil and will not give as long a spark as the latter, for the number of turns of wire are fewer and the potential or voltage is thereby cut down; but this is more than compensated for, as the discharge is heavier, caused by a greater amount of current developed. As the induction coil is, in nearly every instance, employed to charge a battery of Leyden jars, the latter discharging its energy by sparking across the gap, this construction is admirably adapted to the class of work for which it is designed.

Interruptors.—There are three general types of interruptors used in connection with induction coils; these are (*a*) the *vibrating spring*, (*b*) the *mercury turbine*, and (*c*) the *electrolytic interruptors*.

(*a*) Of the vibrating-spring interruptor there are numerous modifications, but the simplest and most widely used form is that shown in Fig. 28; it is sometimes

Digitized by Google

termed a Neef hammer interruptor, in honor of Neef, who invented it. It consists of a steel spring with one end rigidly atached to a post or standard, while the free end carries a disk of soft iron called an *armature*. A second standard carries a screw having a platinum

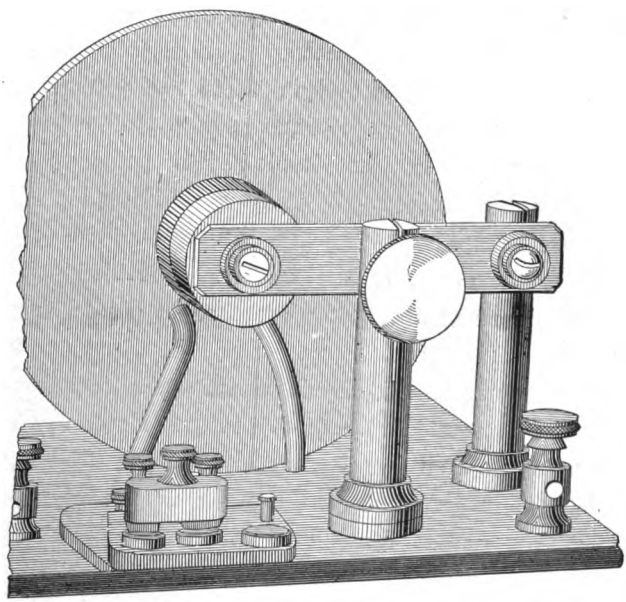

FIG. 28.—Vibrating-spring Interruptor.

point which makes contact with the vibrating spring by means of a bit of platinum soldered to the latter. When a current flows through the interruptor and primary of the induction coil, the core of the latter is magnetized and attracts the armature, drawing the spring forward and breaking the current between the contacts. The core,

Digitized by Google

now demagnetized, releases the armature, and the elasticity of the spring causes it to again make contact with the stationary point. In this interruptor there is only one adjustment to make, and this is done by means of the screw carrying the movable contact-point.

(*b*) The mercury turbine interruptor is frequently used in commercial wireless stations. This device is capable of making and breaking the primary current from 10 to 10,000 times per second. Its construction is comparatively simple and its action effective. In the base of an iron containing vessel having a ribbed bottom six pounds of pure metallic mercury are placed. Through the center of the vessel is a revolving worm or a small centrifugal pump attached to a steel spindle driven by an electric motor. Above the worm or pump is a tube or nozzle, also attached to the spindle, and when the latter is rotated at a high speed the mercury contained in the well is raised until it reaches the nozzle, when it is projected against the side of the vessel. A sector or segment of metal sets inside the vessel, from which it is insulated, and in such a position that the mercury is thrown against it, thus completing the circuit, and breaks it when it has passed the segment and impinges on the side of the vessel. By varying the speed of the shaft to which the nozzle is attached, and the length of the segment, the number of interruptions may be changed at will. When installed on shipboard, the interruptor with its motor, which is connected direct to the spindle, is swung in gimbals, as may be seen in Fig.

Digitized by Google

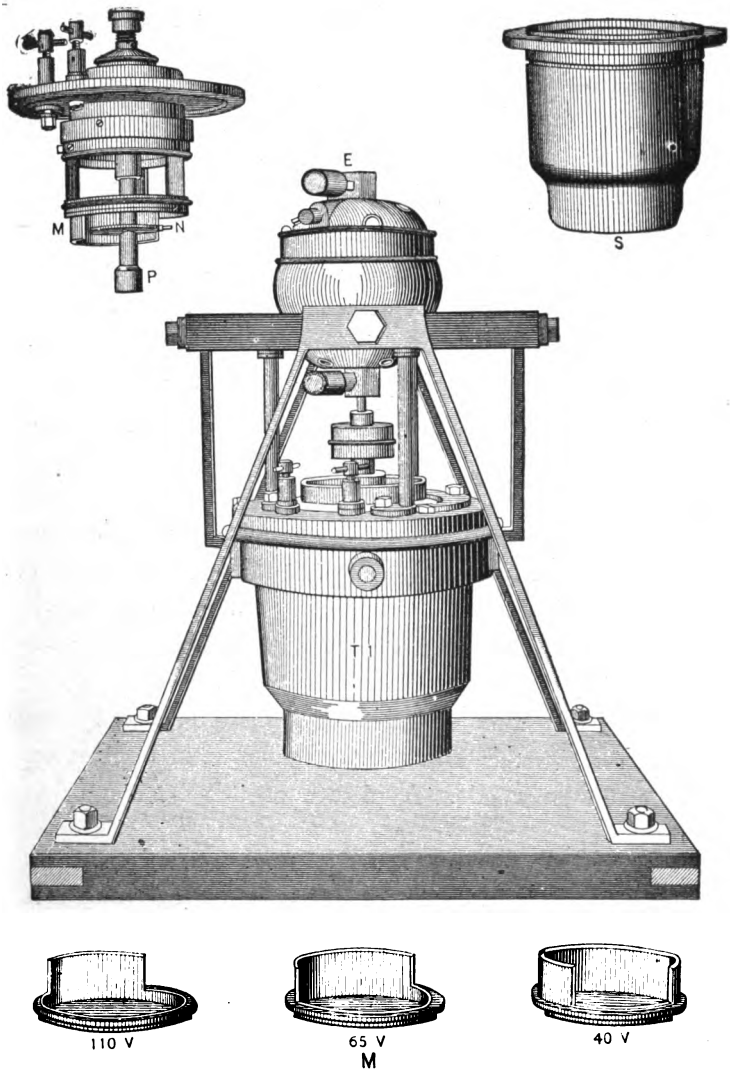

FIG. 29.—Mercury Turbine Interruptor with Electric Motor.

T1, Mercury Interruptor; *E*, Electric Motor; *M*, Segments; *P*, Centrifugal; *N*, Nozzle Pump; *S*, Cast-iron Vessel,

Digitized by Google

29. The motor is an ordinary direct-current machine wound to operate on the same voltage as the primary of an induction coil, since both are included in the same circuit. Where the voltage of the primary is low the segment must be increased in length; that is to say, for a potential of 110 volts the segment must be a quarter of a circle, and for 55 or 60 volts it must equal the half of a circle.

(*c*) Some makers of apparatus prefer the electrolytic interruptor to the one just described, for in this type there are no moving parts. The interruptor is made up of a vessel containing a solution of dilute sulphuric acid, called the *electrolyte*, and in this is immersed a platinum anode, or positive terminal, having a surface of about $\frac{3}{16}$ of a square inch, and a lead cathode, or negative terminal, of 144 square inches. When these electrodes are connected in series with the primary coil and a source of electromotive force of 40 volts, interruptions will take place through the formation and collapse of bubbles on the platinum anode. A picture of this interruptor is shown in Fig. 30.

The Condenser.—An induction coil if it is to render efficient service must have an interruptor that "makes" and "breaks" the current with extreme suddenness; but even in the mercury-turbine and electrolytic interruptors the time required to effect the break is large when compared with zero, i.e., absolute instantaneousness. Where the source of current, the primary of the coil, and the interruptor are connected in series the voltage rises in

Digitized by Google

virtue of the inductance of the primary due to the number of turns of wire of which it is formed, and as a result of this an excessive spark takes place at the interruptor contacts.

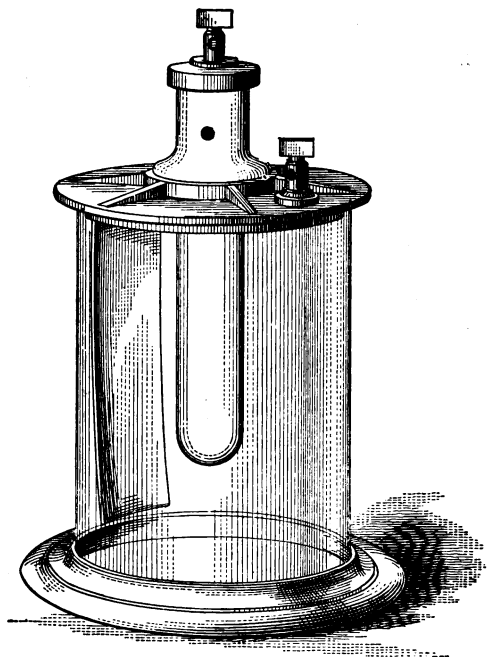

FIG. 30.—Electrolytic Interruptor.

(*a*) To prevent this a condenser is *shunted* across the interruptor where the break occurs. Condensers for this purpose are made of sheets of tin-foil, these being alternately connected and separated from each other by sheets of mica. After the condenser is thus built up it is immersed in a melted insulating compound under

Digitized by Google

pressure and the air is exhausted by means of an air-pump. This is done to prevent the bubbles of air from remaining between the successive leaves of tin-foil, which, if left there, when the condenser is charged might serve as a conducting path for the energy and so disrupt it.

The Transformer.—While a transformer and an induction coil are fundamentally the same since both utilize

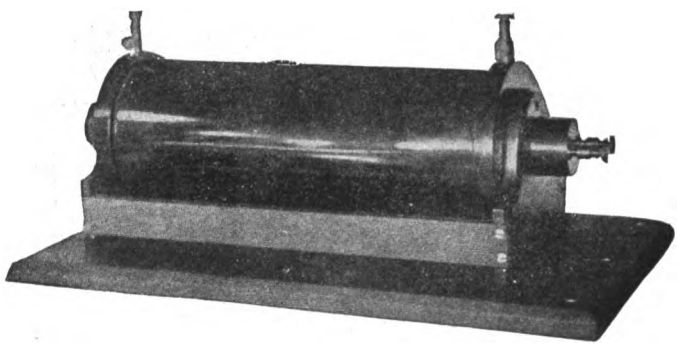

FIG. 31.—Open Core Transformer.

the principles of mutual induction, a transformer is not only more simple than an induction coil, but it is also more reliable and efficient. A transformer may be of the *open-core* or *closed-core* type.

An open-core transformer, Fig. 31, is constructed like an induction coil in that it has a long, straight iron core and around which the primary and secondary coils are wound, but neither the interruptor nor the condenser shunted around the latter are needed.

A closed-core transformer, Fig. 32, has its core formed

Digitized by Google

of a ring or a rectangle of iron upon which the primary and the secondary are wound, but like the open-core transformer it is minus the interruptor and the condenser shunted around it. The open-core transformer is less efficient than the closed-core transformer and to deliver

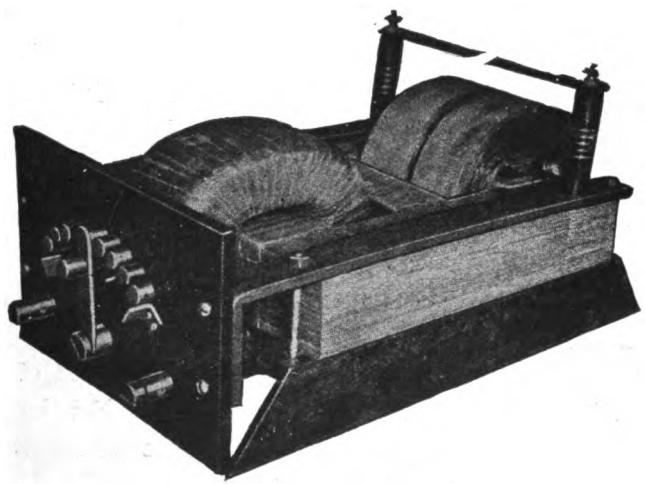

FIG. 32.—Closed Core Transformer.

an equal amount of energy to the oscillation circuits as the latter, with the same initial power, more wire and more insulating material must be used in the former and this increases its size and weight as well as its cost of construction.

As an offset to these untoward features the terminals are widely separated, as compared with a closed-core transformer, and hence in the former there is less liability

Digitized by Google

of the poetential breaking down the insulation and this obviates the necessity of immersing it in oil. This feature makes the open-core transformer well adapted for ship installation as it removes a fire hazard which those responsible for a ship taboo. In large and efficient land stations, however, the closed-core transformer is chiefly used.

Resistance and Impedance Coils.—There are devices employed for regulating currents supplied to induction coils and transformers, namely (*a*) a *resistance*, and (*b*) a *reactance*. The first is a rheostat formed of a number of resistance coils and provided with a lever for throwing in the one or more of the coils. A rheostat is used for induction coils and will serve for small station sets.

The second is an impedance coil and is formed of a coil of wire wound on a soft iron core. For large station sets an impedance coil is more economical and more efficient than a rheostat.

Spark-gaps.—In some systems the spark-gap consists merely of two brass balls an inch or so in diameter, mounted on brass rods in alignment and sliding through insulated supports. In others they consist of a pair of vertical zinc rods with rounded ends, oppositely disposed, and one of which is movable; these are enclosed in a circular box having a mica peep-hole and mounted on top of the form on which the inductance coil is wound or in any convenient place. The object of enclosing the spark-gap is to deaden the sound of the disruptive

Digitized by Google

discharge, while a view of the spark may be had through the mica window. Fig. 33 shows the spark-gap with the case removed.

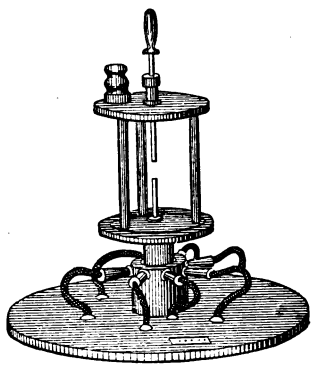

FIG. 33.—Adjustable Spark-gap.

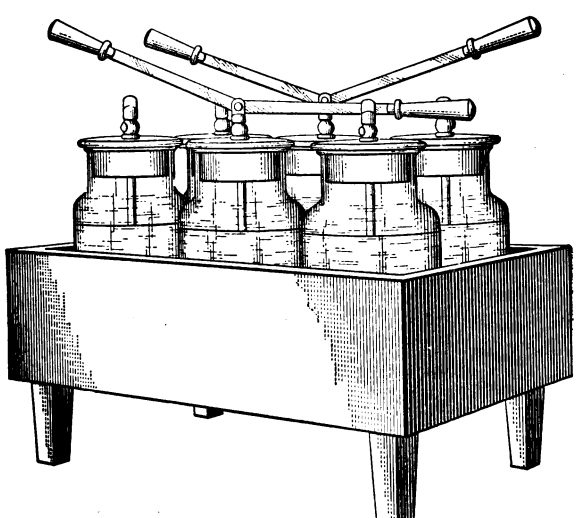

FIG. 34.—Adjustable Leyden Jar Condenser.

Digitized by Google

High-tension Condensers.—There are two types of high-tension condensers used in wireless transmitters, namely the *Leyden jar battery* and the *glass plate*. The latter has been generally used, since it is less liable to breakage than the former.

In either case a condenser is formed by coating the opposite surfaces of the glass with tin or copper foil. Such a battery is capable of withstanding high-potential strains and is inserted in the closed oscillation circuit. The jars supplied with the sets vary in number from three to twelve according to the size of the equipments. The jars are mounted in a case or in a cylinder their inner and outer coatings being connected in parallel. Fig. 34 shows a battery of Leyden jars with contact levers for throwing in and out the jars.

Inductance Coils.—In order to *tune* the open and closed circuits of a transmitter to the same period of oscillation, tuning inductance coils are employed.

There are two types of tuning coils in general use, namely (*a*) a single coil for conductive coupled circuits, and (*b*) an oscillation transformer for inductive coupled circuits.

(*a*) The single coils are usually formed of four or more turns of bare copper wire wound spirally on an insulated frame, or on a hard rubber cylinder. The coil is fitted with flexible conducting cords with spring clips attached to their free ends. By means of these clips the value of inductance may be varied at will. Fig. 35 shows a single tuning coil with the spark-gap mounted on top.

Digitized by Google

(*b*) The oscillation transformer consists of two spirally wound coils mounted in a hard rubber framework. The

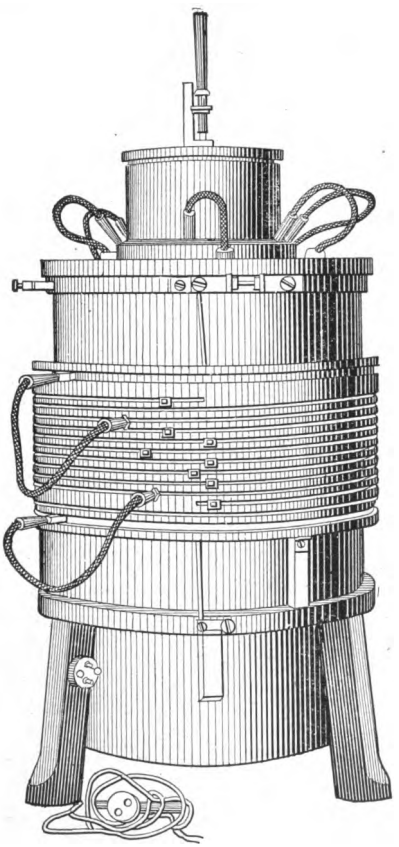

FIG. 35.—Variable Tuning Inductance Coil.

lower coil is the primary and the upper coil the secondary This type of coil permits a large number of wave lengths to be used and almost any degree of coupling can be

Digitized by Google

obtained. Fig. 36 illustrates a form of oscillation transformer.

Aerial Switch.—The purpose of this device, shown in Fig. 37, is to throw the transmitter and the receptor

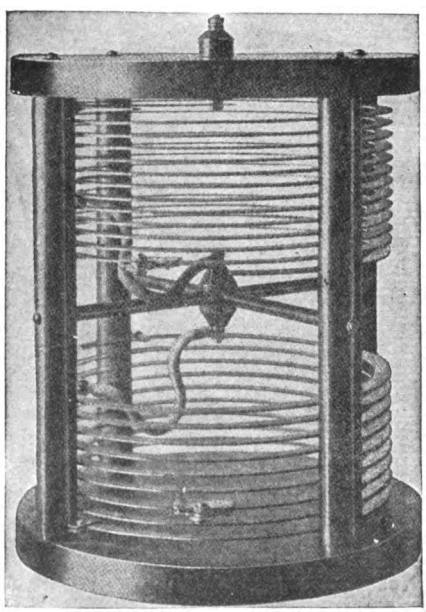

FIG. 36.—Tuning Oscillation Transformer.

respectively into and out of connection with the aerial wire. When the switch is down to send, the power circuit is closed, and the receptor is cut out. When the lever is up to receive, the power is cut off and the receptor is connected with the aerial wire.

Digitized by Google

Anchor Gaps.—These devices are miniature spark-gaps connected in the aerial wire system and are used

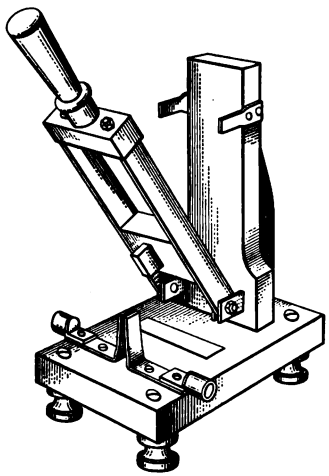

FIG. 37.—Aerial Switch.

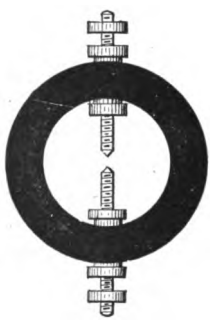

FIG. 38.—Anchor Gap.

to automatically cut out the transmitter when the receptor is cut in. One form is pictured in Fig. 38.

Hot-wire Ammeter.—A *hot-wire ammeter* is connected the aerial wire and is necessary to show when the sending circuits are in tune; this ammeter is made to read from 0 to 0.5 ampere. It is shown in Fig. 39.

Digitized by Google

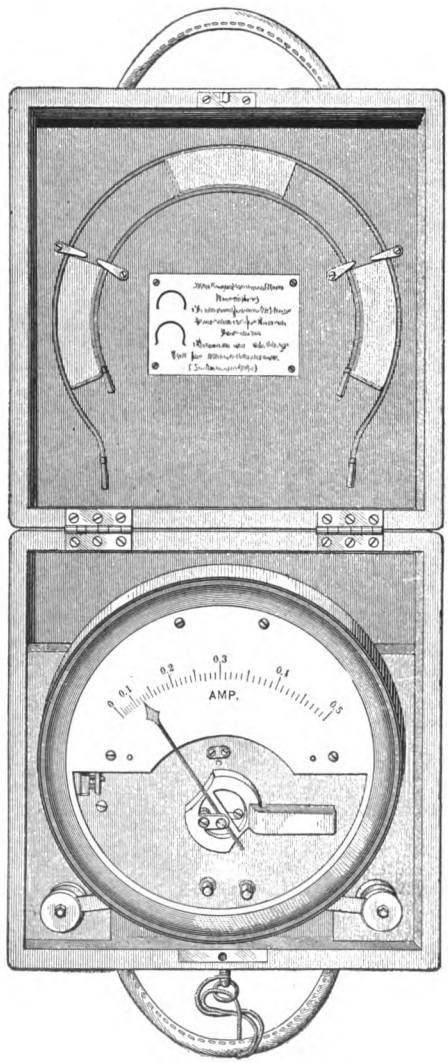

FIG. 39.—Hot-wire Ammeter.

Digitized by Google

CHAPTER IV

APPARATUS OF A COMMERCIAL STATION—*Continued*

Receiving Instruments.—There are two types of receptors used in wireless telegraphy; in the first, or *coherer type*, the message is printed in the telegraphic code, and in the second, or *auto-detector* type, the message is audibly indicated by a telephone receiver.

The Coherer Receptor.—This type of receptor has the advantage of printing the telegraphic code on a paper tape and hence provides a permanent record of the received message. It is, however, complicated and therefore slow in operation and difficult to keep in adjustment.

In this type of receptor the apparatus comprises (*a*) a detector of the coherer type; (*b*) a tuning inductance coil; (*c*) a non-inductive resistance; (*d*) two fixed condensers; (*e*) a relay; (*f*) a tapper; (*g*) a Morse register; (*h*) choking coils or polarized cells; (*i*) dry cells, and (*j*) relay testing coils and other instruments.

(*a*) *The Coherer*, Fig. 40, consists of a small glass tube having terminal conductor-plugs of silver, beveled at the ends to form a V-shaped pocket. Leading-in wires are sealed in the ends of the tube, and these are attached to the conductor-plugs as shown. The pocket or space formed

Digitized by Google

by the approaching ends of the plugs contains a small quantity of nickel and silver filings. The teat projecting

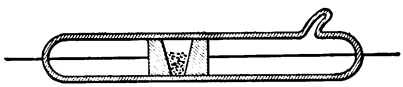

FIG. 40.—Marconi Coherer.

at right angles to the tube is the part where the coherer was attached to the air-pump and was sealed off after the tube was partially exhausted, which prevents the oxidization of the enclosed filings.

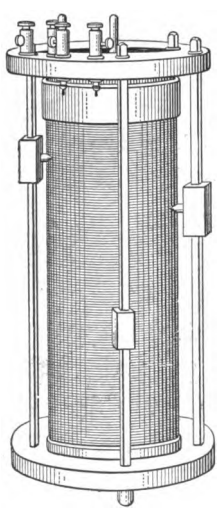

FIG. 41.—Three-slide Tuning Coil.

(*b*) *The Tuning Coil* consists of a cylindrical glass tube suitably mounted with hard rubber ends and held together with square brass rods; the latter serve as guides for the sliding contacts, of which there are three as shown in Fig. 41. Two of the contact rods are connected with the lower terminal of the coil. The upper terminal of the coil ends in a binding-post which is joined to the coherer. The third contact rod ends in a binding-post and to this the aerial wire is connected.

(*c*) *Non-inductive Resistance.*—This is a coil formed of fine wire which has been doubled and wound back on itself on a spool so that both ends are brought to the outside.

Digitized by Google

This resistance is only used when messages are to be received from a nearby station and the received wave is likely to be so strong that it will injure the coherer.

(*d*) *Condenser.*—In the aerial-wire system between the coherer and the ground and between the coherer and the relay a small condenser, built up of sheets of tin-foil and oiled paper, is inserted. Its purpose is to prevent the atmospheric electricity accumulated by the aerial wire from passing through the coherer, as well as the current from the dry cell in the coherer circuit from short-circuiting through the tuning coil to the earth.

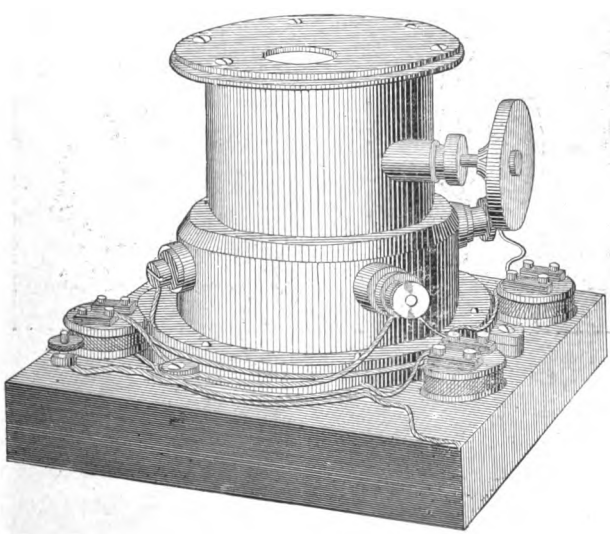

FIG. 42.—Polarized Relay.

(*e*) *Relays.*—The relay used in ordinary telegraphy is not nearly sensitive enough for wireless work and hence

Digitized by Google

a *polarized relay* is used; a polarized relay has a permanent steel magnet and an electromagnet so arranged that both poles of the latter are N, or positive, when no current flows through the magnet coils. When the coherer which is connected in series with the coils of the relay and a dry cell permits the current to complete the circuit, the

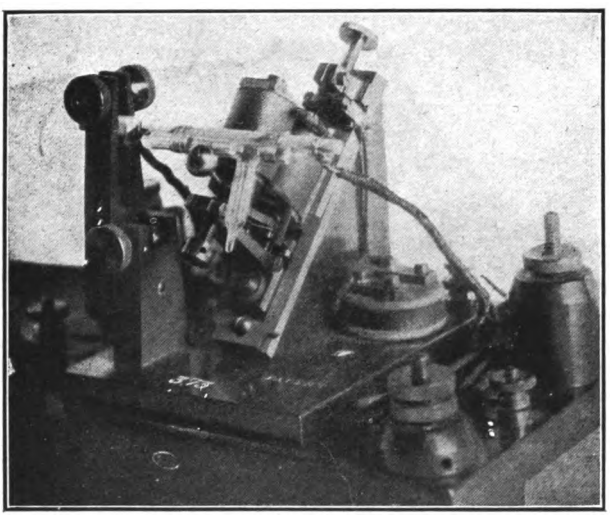

FIG. 43.—Marconi Tapper.

electromagnet is energized and one of the poles changes its polarity to S, or negative, and the other to increase its N, or positive, intensity. The armature lever is free to swing between the poles of the electromagnet within narrow limits, and when the poles become magnetic the movable contact-point attached to the armature is drawn into contact with a stationary point, and in this way

Digitized by Google

closes the circuit in which the tapper and Morse register are placed. A polarized relay is shown in Fig. 42.

(*f*) *Tappers or Decoherers.*—When the filings of a coherer are drawn together or cohered by the electric oscillations set up in the resonator circuit and the impulse printed by the Morse register, there can be no further indications of the incoming waves until the filings are broken apart or decohered, restoring them to their original loose state and high resistivity. To accomplish this it is only necessary to gently tap the coherer tube. It would of course be impracticable to do this manually and so an automatic tapper was devised. The tapper is very similar in construction to a vibrating electric bell or the vibrating spring interruptor previously described. The vibrating armature carrying the hammer is short compared with that in a bell, and its vibrations are very rapid. Attached to the base on which the tapper is mounted is a holder for the coherer, as in Fig. 43.

(*g*) *Morse Registers.*—In the two principal foreign systems that are used in this country the Morse register, or Morse writer as it is sometimes termed, is used to print the message on a tape of paper. These registers are usually constructed to release the spring mechanism, that draws the tape under the inked disk, automatically, but in some cases the spring motor is released by the operator.

A Morse register is shown in Fig. 44 and comprises the spring motor that moves the paper and the electrically operated mechanism that prints the dots and dashes

Digitized by Google

upon it. The spring motor is placed inside a brass case which serves to support the spindles; the case is fitted with a glass top to keep out the dust and yet enables the operator to see its various parts. To one of the spindles projecting outside of the brass case a toothed wheel serves to draw the paper from the roll under the inked surface of a steel disk which prints the message

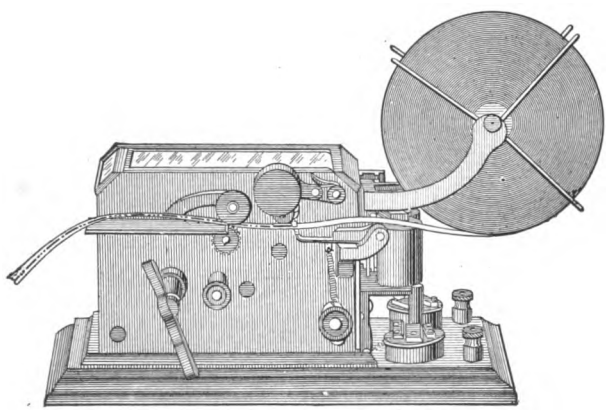

FIG. 44.—Morse Register.

in dots and dashes upon it. The tape should move at a slow rate of speed compared with the vibrations of the hammer of the tapper, otherwise there will be a succession of dots where these should run together and make dashes. The coils of the register, like those of the tapper, are wound to about 12 ohms, and the two instruments are connected in parallel.

(*h*) *Choking Coils and Polarized Cells.*—In some

Digitized by Google

receptors *choking coils* are introduced into the circuits to cut off the local oscillations set up by the sparks produced on the break of the relay and tapper contacts. These coils are also wound non-inductively of very fine silk-covered wire.

In other systems *polarized cells* are employed instead of choking-coils to prevent the sparking of the contacts from affecting the coherer. Polarized cells are small glass vessels in which a pair of platinum wires are immersed in a dilute solution of sulphuric acid. A battery of four or five of these cells is connected across the relay contacts.

(*i*) *Dry Cells.*—The dry cells that furnish the current for operating the relay, tapper, and Morse register are the ordinary kind used for ringing bells, etc. One cell is used in the coherer and relay circuit, and four or five cells, connected in series, make up the battery to operate the tapper and register circuits. When fresh the cells develop about 1.5 volts.

Instruments. — Other than the apparatus described above there are various instruments sent with each outfit to facilitate the making of adjustments and insure the proper working of the equipment.

(*a*) To ascertain the sensitiveness of the relay a coil having a total resistance of approximately 40,000 ohms is sometimes supplied by the makers; this is termed a *relay-testing coil*, and besides the end terminals there are usually two others, so that several values may be obtained.

(*b*) For tuning the resonator system of the receptor some kind of a tuning device is necessary; these differ

Digitized by Google

in various makes, but the one shown in Fig. 45 will serve to indicate the general design. It includes an inductance coil of the same value as the one used in the receptor, a condenser having practically the same capacity as that of the coherer, and a needle-point spark-gap that can be

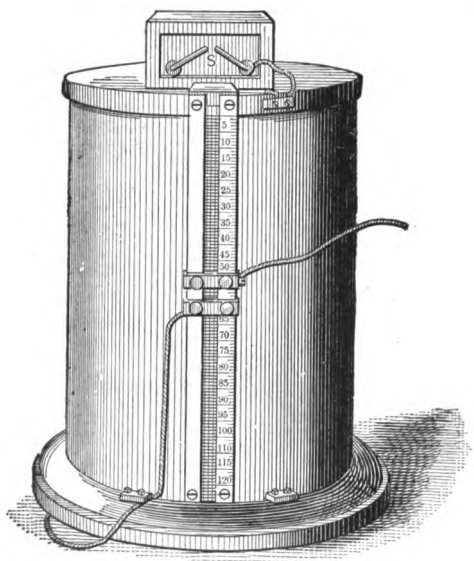

FIG. 45.—Tuning Device.

adjusted. Its uses and the method of using it, as well as the other instruments and apparatus described, will be found in the succeeding chapters.

(*c*) To test the working properties of the coherer a *testing-box*, or *buzzer*, is employed. This is a small box of wood with a buzzer inside. A buzzer is made like an electric bell, having an electromagnet and a vibrating

Digitized by Google

armature but no gong; inside with the buzzer is a dry cell; these are connected in series with a push-button projecting through the lid. When the button is pushed minute sparks are set up at the contact-points when the break occurs and miniature trains of electric waves are sent out in consequence.

Auto-detector Receptors.—Receptors of this type are extremely simple, easy to keep in adjustment and permit rapid working. There are several kinds of auto-detectors, but the magnetic, electrolytic, and crystal detectors are the most sensitive and consequently the most widely used. Of the foregoing detectors only the electrolytic requires a battery current to make it operative, though a small current can be used to advantage with some crystal detectors.

Magnetic Detector Receptor.—This receptor has been adopted by one of the large commercial companies. It comprises (*a*) a magnetic detector; (*b*) a tuning coil; (*c*) a variable condenser; and (*d*) a pair of head telephone receivers.

(*a*) *The Detector* consists of a small glass tube, Fig. 46, on which is wound a primary made of a single layer of wire, the terminals leading to the aerial and earth wire either directly or through a coupled resonator circuit. A second coil of wire is slipped over the primary, and the terminals of this connect with a telephone receiver; two grooved wheels 4 inches in diameter are connected by a flexible cord formed of iron wires, which is made to travel through the glass tube by means of a spring motor

Digitized by Google

enclosed in a case, while two steel horseshoe magnets are placed closely to the moving band of wire and adjusted until the maximum effect is obtained.

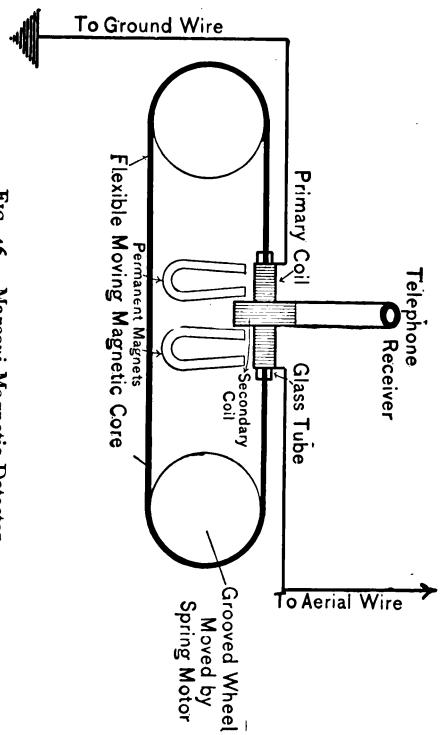

FIG. 46.—Marconi Magnetic Detector.

(*b*) *Tuning Coil.*—For this receptor the tuning coil consists of silk-covered magnet wire wound on a glass form. It is provided with a pair of sliding contacts as shown in the accompanying illustration, Fig. 47.

(*c*) *Variable Condenser.*—This condenser, Fig. 48, is of

Digitized by Google

the rotary variable type and is built up of a large number of semicircular brass plates, half of which are fixed and

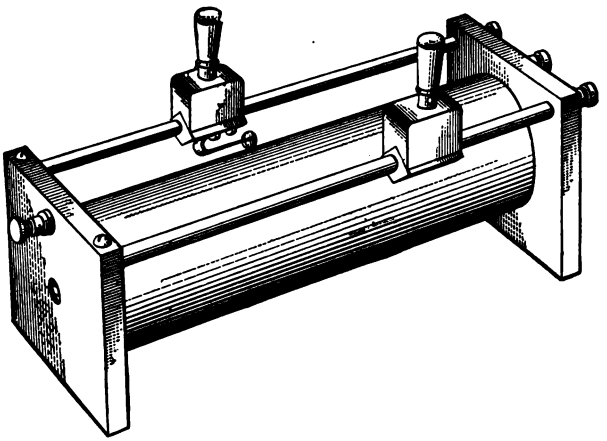

FIG. 47.—Two-slide Tuning Coil.

half of which are rotary, the clearance between them being $\frac{1}{64}$ inch. These plates are contained in a brass

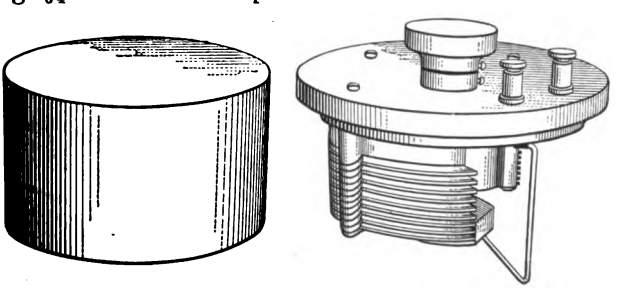

FIG. 48.—Variable Receiving Condenser.

case with a hard-rubber handle on top for making the adjustments.

Digitized by Google

(*d*) *Telephone Receivers.*—The telephone receivers used in connection with auto-detector receptors are generally of the watch-case type. The ear-pieces are connected to a band of spring steel which holds them comfortably on the head and closely to the ears; hence this form

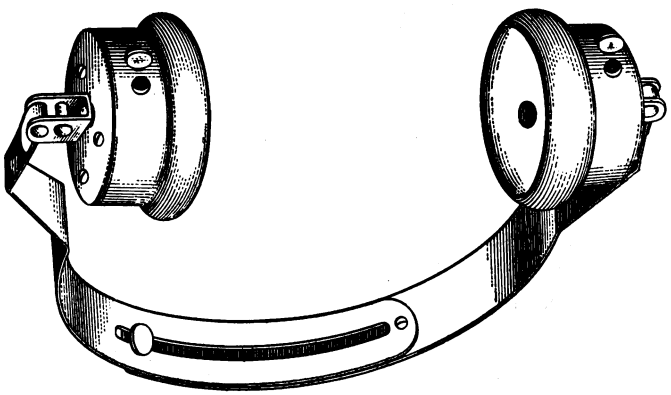

FIG. 49.—Adjustable Head Telephone Receiver.

is known as a head telephone receiver. It is shown in Fig. 49.

Crystal Detector Receptors.—This type of receptor is largely used in the Army and in the Navy. It is formed of (*a*) a crystal detector; (*b*) a tuning coil; (*c*) a variable condenser, and (*d*) a pair of head telephone receivers.

Crystal Detectors.—There are many crystals which, when placed in light contact with some of the metals or with other crystals, will serve as a detector of electric waves. Carborundum, silicon, chalcopyrite, zincite, and iron pyrites are a few of the most important crystal

Digitized by Google

used, while iron, phosphor bronze, tellurium, aluminum, and molybdenum are some of the metals employed. Zincite in contact with chalcopyrite forms what is known as the *perikon* detector.

These elements are held in position in a metal frame, having a variable contact. A good holder is shown in

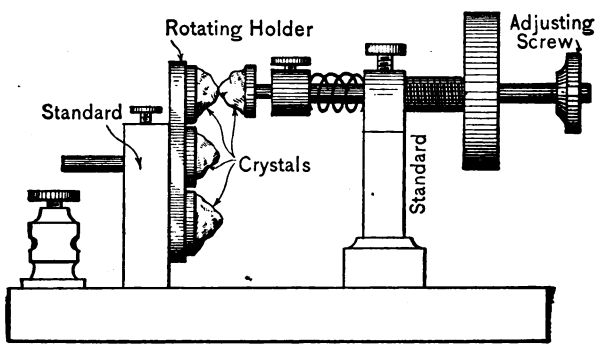

FIG. 50.—Crystal Detector.

Fig. 50. It consists of two brass standards mounted on a hard-rubber base. Through the shortest standard a rotatable disk is pivoted; this disk carries four brass shells into each of which a crystal is set in lead.

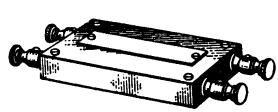

FIG. 51.—Fixed Condenser.

Passing through the opposite standard is a brass rod carrying on its inner end a crystal holder which in this case is secured by a set-screw; the outer end of the rod is fitted with adjusting

Digitized by Google

screws which permits the lightest contact of the opposing crystals to be made.

Fixed Condenser.—A small mica and tin-foil condenser of fixed value is used to prevent the direct currents set up in the detector from flowing through the inductance. It is shown in Fig. 51.

Tuning Coil, Variable Condenser, and Telephone Receivers.—These are identical with those described in connection with the magnetic detector receptor. It is necessary to use a high-resistance telephone receiver in connection with a crystal detector and such receivers are usually wound to 2000 or 3000 ohms resistance.

Electrolytic Detector Receptor.—A receptor using an electrolytic detector is more sensitive than either of the foregoing types, but it is also more difficult to keep in adjustment. A receptor of this type may be made up of (*a*) an electrolytic detector; (*b*) a tuning transformer; (*c*) a variable condenser; (*d*) a potentiometer; (*e*) a dry cell, and (*f*) a pair of head telephone receivers.

The electrolytic detector, Fig. 52, is not unlike the electrolytic interruptor previously described, though on an exceedingly small scale. Into a small platinum vessel a little larger than the end of an unsharpened lead pencil, and which forms the cathode or negative terminal, a very fine platinum wire a few thousandths of an inch in diameter is just immersed in the solution or electrolyte; of the latter there are several different kinds, as (*a*) a 10 per cent solution of sulphuric acid; (*b*) a dilute alkaline solution; and (*c*) a 20 per cent

Digitized by Google

solution of nitric acid. The points are made of a silver-jacketed platinum wire, the finest obtainable being .00002

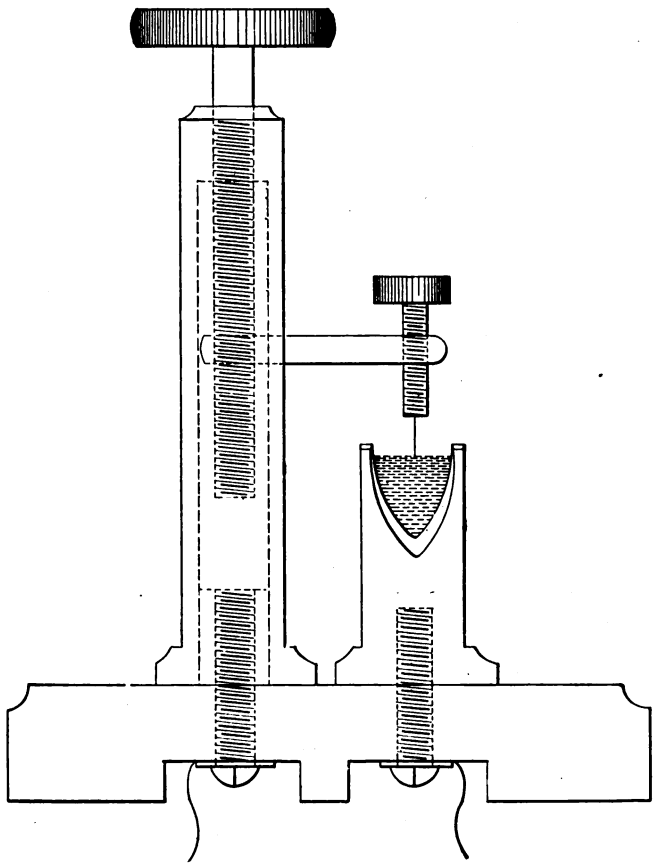

FIG. 52.—Electrolytic Detector.

inch in diameter. The detector is provided with a screw adjustment for raising or lowering the fine platinum point in the electrolyte.

Digitized by Google

Oscillation Transformers.—Tuners of the transformer type, Fig. 53, are used in inductive coupled receptors and are formed of two coils of wire, one sliding inside the other. Both coils are provided with mechanically oper-

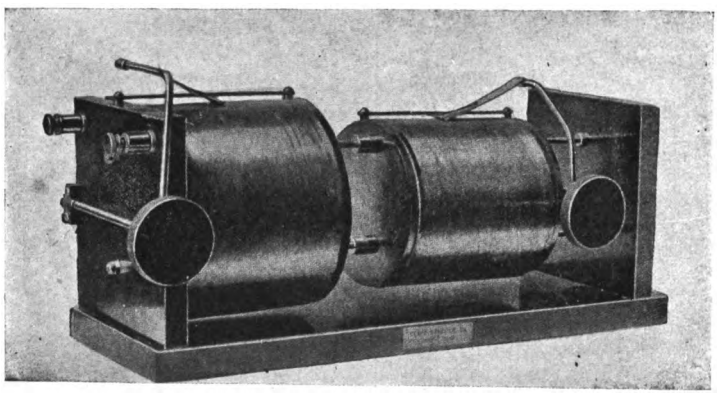

FIG. 53.—Tuning Oscillation Transformer.

ated sliding contacts whose positions are varied by hard-rubber handles.

Condensers and Telephone Receivers.—These instruments are the same as those described for use with the electrolytic detector receptor.

Digitized by Google

CHAPTER V

THE AERIAL-WIRE SYSTEM

The Signaling Distance.—The aerial-wire system is understood to include an oscillation circuit from the top of the wire to the plate in the ground and hence comprises the aerial wire, the spark-gap, or detector, where a simple open circuit is used, or an inductance coil, where a *compound*, i.e., an open and a closed circuit are coupled together.

The successful transmission of wireless messages depends largely upon the condition of the aerial-wire system, and the operator, if he wishes to obtain the best results, must not overlook the necessity of keeping them perfectly insulated from the mast, building, and trees. It is not enough to know that the wires have been put up properly, for moisture may collect upon the suspension insulator that joins the top of the wire to the tail-block; and if this occurs and is not attended to, much of the energy otherwise available for radiation is lost. For this reason the aerial wire should be arranged with a tail-block on the cross-tree or topgallant-mast so that it may be lowered for inspection and hoisted up again.

Digitized by Google

The distance to which the waves may be radiated depends on several factors, such as the initial energy or amount of power used, whether the transmission is to take place over salt water or the surface of the ground, the kind of system used, the height, form, and dimensions of the aerial, etc. Roughly it may be said that, with a given amount of power, instruments of standard make, and all other things being assumed equal, the distance to which signals can be sent increases as the square of the length of the aerial wire that sends out the waves; or in other words, if the wire is 20 feet in height and will send messages one mile, then a wire 40 feet in height will send them four miles, and one 80 feet in height will carry waves 16 miles, and so on. This deduction holds good only in the case of a single-wire aerial, for where the aerial is formed of more than one wire, or carries a cage at the top or other capacities at its lower end, the arrangement permits a greater amount of energy to be radiated and the law is no longer tenable.

Electric waves are propagated to much longer distances over the surface of salt water than over fresh water, snow, or land. Considerable difference in the signaling distance is found to exist due to the condition of the weather as well as to the different seasons of the year, as, for instance, it may be cited that the effective range is cut down during the heated period of the summer months. A marked difference is also noticed according to whether the messages are sent during the day or night, the longest distance being attained after the sun has gone down.

Digitized by Google

This effect is attributed to the dissipating influence of daylight on the oscillating currents set up in the aerial wires.

The Aerial Wire.—The term *aerial wire* is used to designate the wire or wires leading from the instruments in the operating-room to the masthead outside which supports it. The aerial may be formed of one or more wires, those generally used being made of phosphor-bronze and having a diameter of about $\frac{3}{16}$ of an inch. As we have seen, the length of the aerial wire, where this is single, determines the wave-length to be sent out; in some installations two aerial wires are used, and these are connected together, usually through the medium of a small spark-gap, at the bottom before they enter the station. Other systems employ aerials that are connected to wire cages at the upper end which increases their capacity, and they not only send out a longer wave but waves of greater power. Where an aerial is formed of a number of wires these should be arranged at a goodly distance from each other, for unless this is done their combined capacity will not be multiplied by their individual capacities.

The distance over which it is possible to send will depend, as we have seen, on the length and the number of wires of the aerial, as well as on the amount of current the induction coil is capable of delivering to the oscillation circuits. The capacity of an aerial wire system is of the utmost value in transmitting, for upon this depends the amount of energy radiated. In receiving, however,

Digitized by Google

large capacity aerials are not needed, and it is often well, when more than one wire forms the aerial to cut one or more of them out, especially if they are provided with cages.

Types of Aerials.—There are several types of aerial wire systems and among the more common may be cited (*a*) the straight *vertical aerial*, (*b*) the *oblique aerial*, (*c*) the *horizontal, flat-top*, or *T, aerial*, and (*d*) the *umbrella aerial.*

(*a*) In the early days of wireless the aerial consisted of a single wire suspended vertically from the spar of a masthead. As the art progressed it was found that a metal plate connected with the upper terminal of the wire gave better results since it added greater capacity to the aerial wire system.

(*b*) Due to the necessity of keeping the aerial wire clear of the mast it became common practice to stretch it at an angle as shown in Fig. 54, thus giving rise to the *oblique aerial*. Ascertaining that added capacity permitted a greater signaling distance to be obtained more wires were added to the aerial, a cylindrical cage of wires usually being connected in at the top. Adding such capacities is electrically equivalent to increasing the length of the aerial.

(*c*) The next development was the horizontal, flat-top, or T aerial, and as this type offered a convenient means of obtaining a large capacity and of keeping the aerial clear of all obstructions, especially on board ship, it found instant favor. In this construction the number

Digitized by Google

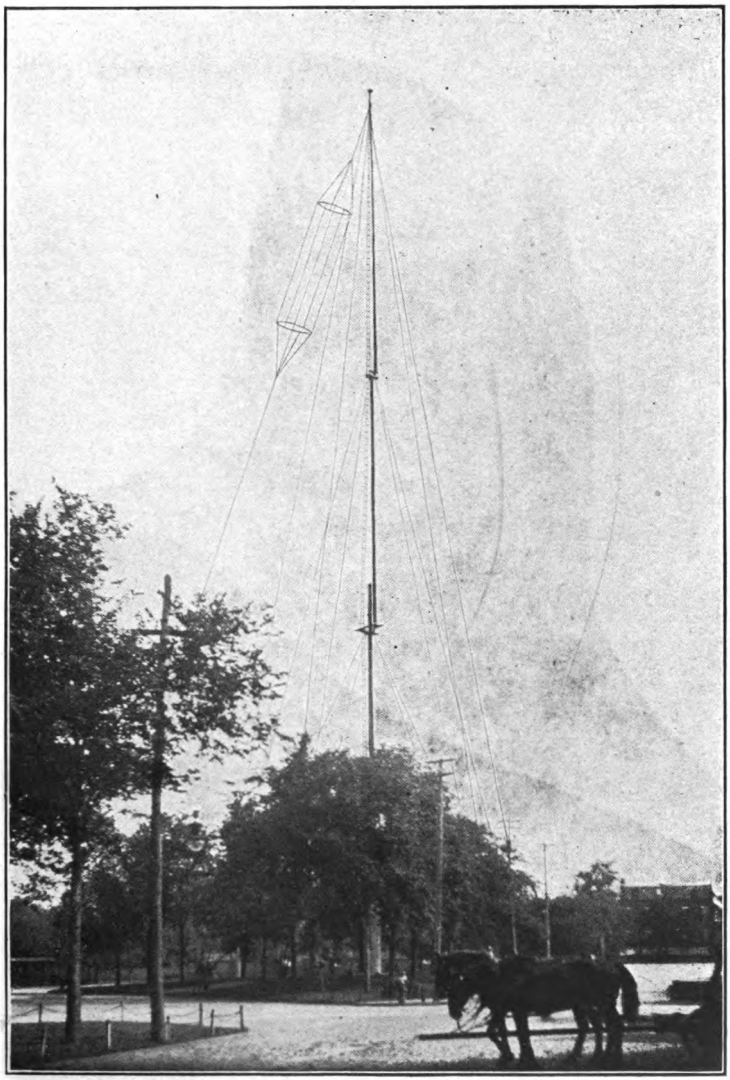

FIG. 54.—Oblique Cage Aerial formerly Used at the New York Navy Yard.

Digitized by Google

Digitized by Google

of parallel wires may be placed as far apart as desired, a decided advantage, as this permits the greatest capacity with the smallest inductance to be obtained, which are essential factors for securing the highest efficiency.

Fig. 55 shows the arrangement of a T aerial and Fig. 57 illustrates the aerial installed on the *Imperator*. It consists of two stranded phosphor-bronze wires held apart by two 10-foot spreaders. Two vertical wires

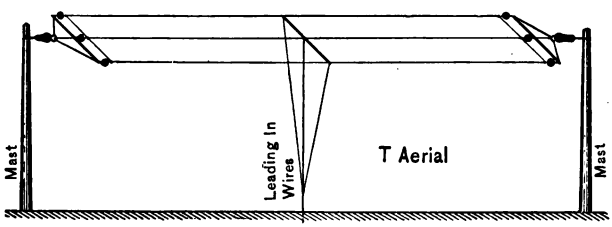

FIG. 55.—T Aerial.

connect with the horizontal wires in the middle and the former lead in to the operating room on the upper deck. The aerial is suspended between the tops of the two masts 216 feet above the sea and has a length over all of 290 feet.

(*d*) From the T aerial to the umbrella aerial was but a step farther in the evolution of aerials. The latter type consists of a number of wires forming a cone, the apex being the top of a mast with the wires branching out in all directions at the head. Since the individual wires are kept well away from each other this arrangement gives the maximum capacity, and hence this aerial is

Digitized by Google

the most efficient known. Aerials of this type are largely used in the portable sets of the United States Army. Fig. 56 indicates the arrangement of the wires in an

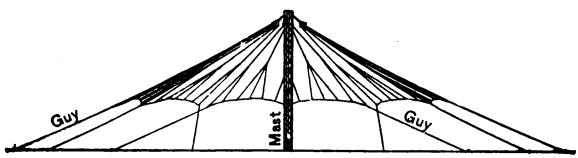

FIG. 56.—Umbrella Aerial.

umbrella aerial and Fig. 58 shows it supported by a jointed pole.

The Mast.—In fitting a ship with wireless apparatus the masts are generally high enough to serve to sustain the aerial wire; on shore the mast may be of any height, and this depends to some extent on the distance to be covered; masts are seldom less than 90 feet in height or more than 210 feet. When this height is reached and it is desired to signal farther the electrical dimensions of the aerials must be increased by adding more wires and by installing a transmitter of greater power. It is not desirable to make the mast of iron or steel, as some of the energy of the electric oscillations set up in the aerial is absorbed by the mass of metal and the radiation is cut down in consequence. The masts are best made of good, clear pine and may be built up of three or four sticks; three sections are ample if the mast does not exceed a height of 180 feet, which is the highest used in the United States Navy, the lowest approximating 130 feet. The mast

Digitized by Google

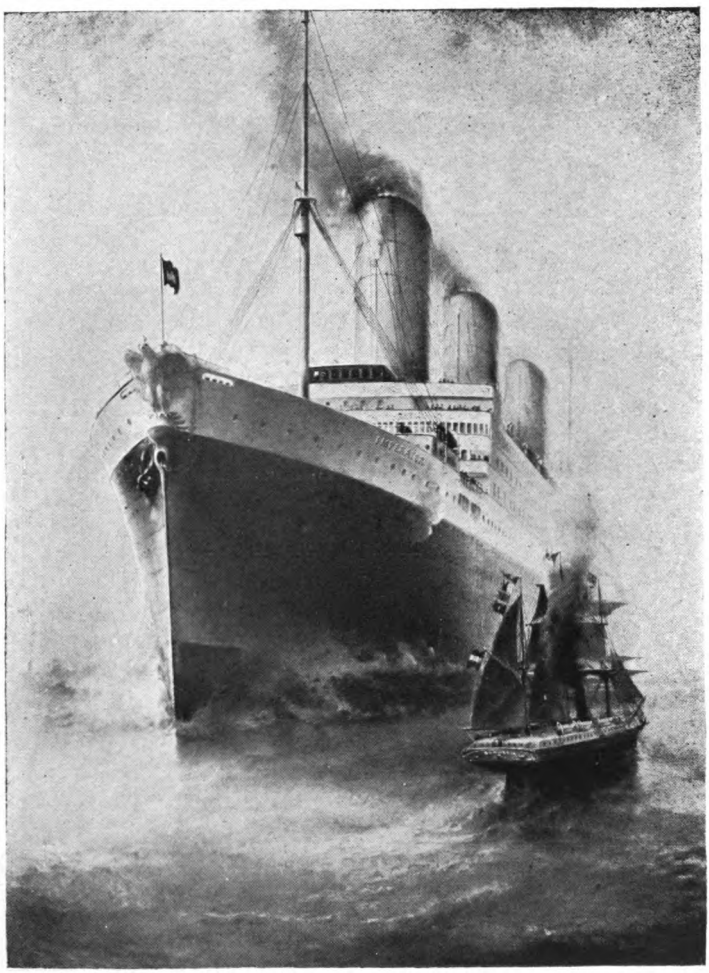

FIG. 57.—T Aerial on S. S. *Imperator*.

Digitized by Google

Digitized by Google

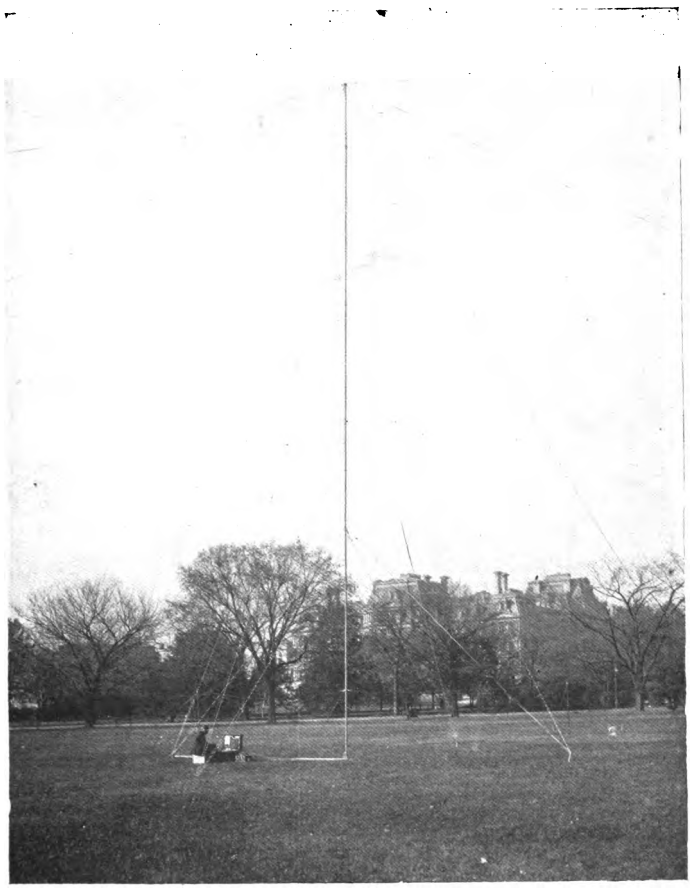

FIG. 58.—Portable Umbrella Aerial.

Digitized by Google

Digitized by Google

should be supported by two sets of rigging, that of the lower mast being of wire cable and that of the topgallant-mast of hemp rope.

One of the requirements to insure good transmission is to keep the mast well away from structures of all kinds, and wherever possible there should be no obstructions between the sending and receiving stations; of course this is not practicable in signaling over land, and the distance is therefore very much cut down when compared with telegraphy over the sea, where the line of propagation is clear. In the U. S. Navy the mast on shipboard from which the aerial wire is suspended is required to be not less than 130 feet above load-water-line, and the rigging of all the mast-poles is set up with hemp rope instead of wire, as well as all the other rigging of the ship, so that there will be as little absorption of energy as possible.

In commercial systems the height of the mast is often less or more than that specified by the Navy. A mast of 190 to 210 feet is best constructed of four poles set in cross-trees and supported by fids, or bars of iron with a shoulder at one end to sustain the topmast over the head of the lower mast; the mast is guyed to braces, and these, if on a sandy seacoast, must be sunk from fifteen to twenty feet deep. The guys may be of hemp or wire rope with hemp terminals spliced in about 100 feet from the ground; the purpose of combining the wire with hemp is to provide proper insulation for the aerial wires, which are supported by a cross-tree near the top, holding them

Digitized by Google

out so that they cannot come in contact with the guys.

Portable Mast.—The portable mast, Fig. 58, used by the Signal Corps of the U. S. Army consists of twelve hollow wood sections, each 6.8 feet long, nine sections constituting the mast proper and three sections serving

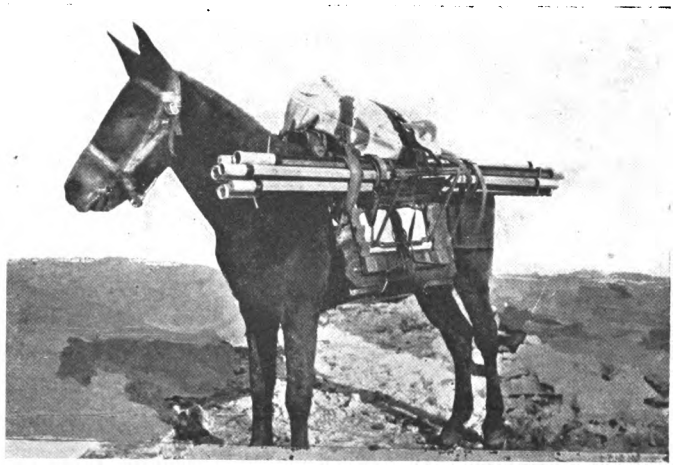

FIG. 59.—Umbrella Aerial and Jointed Mast Packed for Transportation.

as a raising lever, the sections fitting into each other. From the metal part of the top section extend six stranded phosphor bronze aerial wires, each of which are provided with snap hooks at one end, the other end terminating in a hard-rubber insulator.

On erecting the mast the sections are put together on the ground. Guy lines are attached to aid the raising of the mast. The mast is then revolved on its horizontal

Digitized by Google

axis until the lever sections are in a vertical position. In the usual field operations four men can quickly and safely raise the mast under all ordinary weather conditions. When the mast is taken down it is easily transportable on the back of a mule as pictured in Fig. 59.

Methods of Suspension.—Where the aerial wires are attached to the cross-tree of the topgallant-mast it must be well insulated. A simple method for suspending aerial wires is shown in Fig. 60; the mast, topgallant-spar, the insulator, aerial wire and its cage are all named in the drawing, so that it will be readily understood when it is said that the insulator, which is of heavy glass or porcelain, is attached to the spar by a loop of tarred rope running through its center. The upper end of the wire to which the cage is made fast is turned over the outside of the insulator, having a groove cut in it, and twisted fast.

A better suspension than the foregoing and one that has been adopted by various commercial companies is shown in Fig. 61. In this case corrugated strain insulators formed of heat, water and smoke-resisting composition are used. The larger ones are about 2 inches in diameter and a foot in length, and the smaller ones are about 3 inches in diameter and 4 inches in length.

The aerial is constructed by twisting each wire to a small strain insulator which in turn is secured to the wood spreader with a withe. One end of the long insulator is wired to the ends of the spreader with small steel cables while a hemp rope running through a tail block,

Digitized by Google

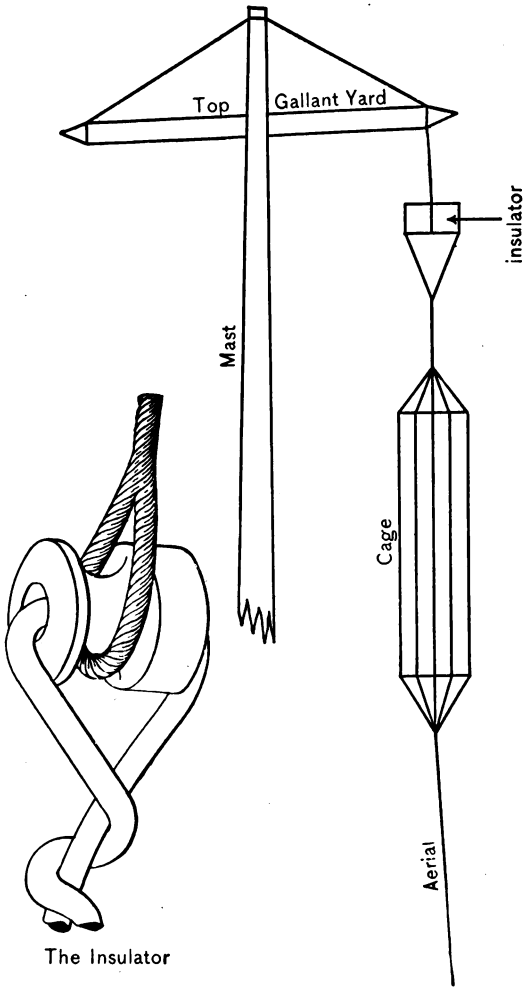

FIG. 60.—A Simple Method of Suspension.

Digitized by Google

the latter being fixed to the mast head, is spliced to the opposite end of the insulator. Fig. 62 shows the long strain insulator to better advantage.

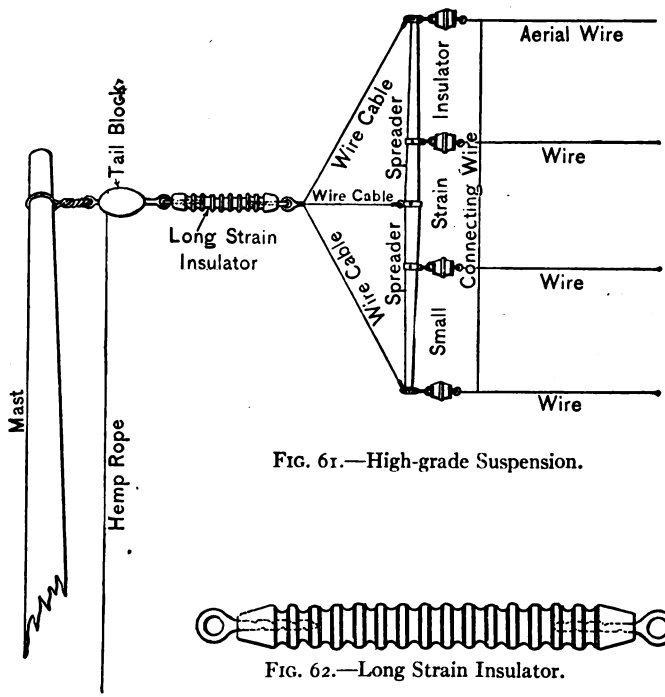

FIG. 61.—High-grade Suspension.

FIG. 62.—Long Strain Insulator.

A method to prevent leakage where the aerial wire leads in the station from the mast to the instruments is shown in Fig. 63, the rattail, or leading-in wire, passing through a composition or hard-rubber bushing inserted in a hole cut in the center of the window pane.

The leading-in insulator shown in Fig. 64 is largely

Digitized by Google

used in the installations of the U. S. Navy as well as by some of the commercial companies. It is made of a composition, called *electrose*, and is better than hard

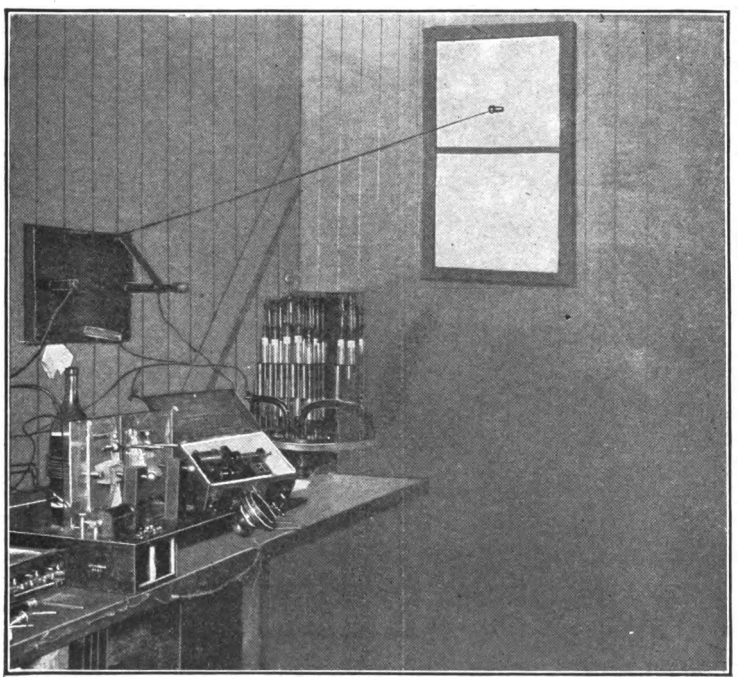

FIG. 63.—Leading-in Method.

rubber, for it does not shrink, resists smoke and is not affected by water.

The Grounded Terminal.—A good *ground* is quite as essential to the successful operation of a wireless system as a good aerial. Sheets of copper or zinc, preferably

Digitized by Google

the former, are embedded in damp earth, and this forms a very good earth connection. A shore station set of instruments should have from 100 to 150 square feet of such surface buried deeply enough to insure a permanently damp connection between the soil and the plates of metal. Copper usually comes in rolls having a width of about 2 feet, and a sufficient number of rolls of the heaviest copper or zinc should be connected together by strips 5 or 6 inches wide cut from the plates and soldering the latter securely together. From the different plates form-

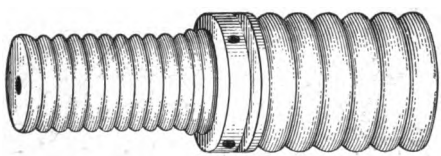

FIG. 64.—Electrose Leading-in Insulator.

ing the *ground* similar strips are soldered, and these are led up to the surface, where they are connected together and then to a wire leading to the instruments. Sometimes the plates are set in the ground vertically, though more often they are placed horizontally; but this is largely a matter of choice modifiable by conditions, and it makes little difference so long as they are well grounded. Frequently places will be found where it is not possible to obtain a good ground, and in such cases a larger amount of surface is necessary, and a switch can be arranged between the grounded plate and the receiver so that the detector may be cut out entirely

Digitized by Google

when sending; where a good ground cannot be had it has been found an excellent plan to provide the transmitter and receptor with separate ground plates. The difficulties of finding a good ground is not encountered on board ship, for all that is necessary is to simply connect the ground terminal to the nearest pipe or other piece of metal connected with the hull of the ship.

The Operating Room.—In this room the apparatus is installed and operated; it may be of any size, though preferably isolated from everything else, and it should have not less than 40 or 50 square feet of floor surface. On shore, small buildings of convenient size and location are often put up expressly for the purpose; the operating room should be in a line with the aerial and the grounded plates should be embedded as closely to the room as may be convenient. A well-designed operating room especially built should have windows on three sides and not only be well lighted, but ventilated and kept perfectly dry. Through the window nearest the mast a hole for the aerial leading-in wire must be cut, as previously described. Fig. 65 shows the New York Navy Yard station. When the apparatus is installed on board ship the best place for the operating-room is between the upper deck and the next one below, the rat-tail of the aerial wire passing through insulators of composition or hard rubber in the upper deck. The instruments should be mounted on a rigid bench, the height of an ordinary table, and this may extend from one end of the room to the other, if the

Digitized by Google

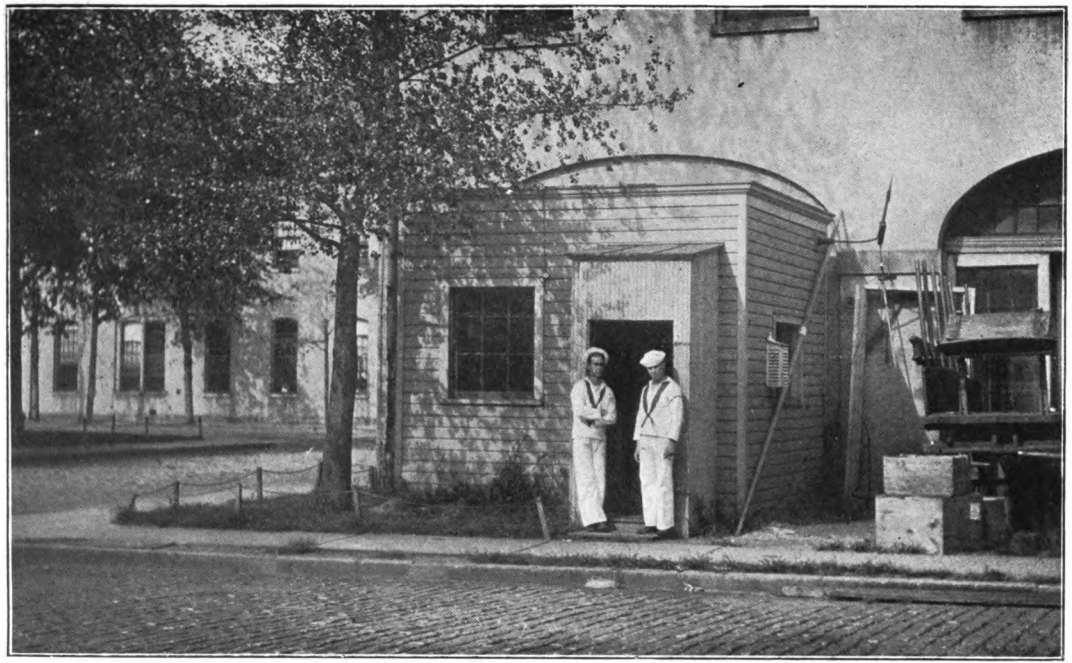

FIG. 65.—New York Navy Yard Station.

Digitized by Google

Digitized by Google

room is not too large; a couple of drawers beneath the table will be found handy for tools, extra parts, etc. The current for shore stations is obtained whenever possible from the regular mains at 110 volts pressure, but often the station is located in some isolated and inaccessible place where there is no central station, and here a small gasoline or oil engine coupled to a direct-current dynamo generating 1000 to 2000 watts supplies the initial energy. Such units should be installed in a separate house, at least 100 feet from the operating-room, so that the noise of the engine will be muffled—a desirable feature always, but an absolute necessity where the receptor is of the auto-detector type. Right here I may say that the young man who expects to become a proficient wireless operator should read up and become familiar with the construction of small gasoline and oil engines and dynamos.

Aerial Wires and Grounds for Field Work.—Under certain conditions of warfare and for experimental purposes, balloons and kites may be used to raise the aerial wire. The balloons used are small silk bags inflated with hydrogen gas; these are sent up when there is not enough breeze to elevate a kite. The aerial wire is usually a single, bare No. 14 stranded aluminum, steel, or copper wire 500 or 1000 feet in length and serves not only as an aerial wire, but in the place of the kite string as well. In light breezes the tailless kite known as a Malay or Eddy kite is used, an idea of which may be gained from Fig. 66; a Blue Hill box-kite is designed to fly in a wind having a velocity of 30 or 40 miles per hour;

Digitized by Google

it is shown in Fig. 67. The aerial wire may be attached directly to the string of the kite after it is started and up

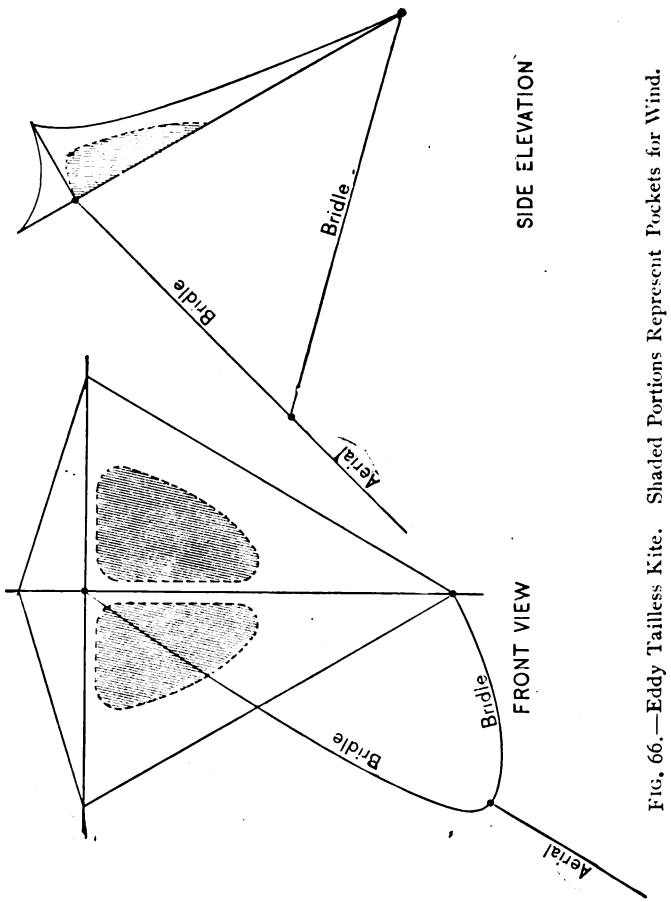

FIG. 66.—Eddy Tailless Kite. Shaded Portions Represent Pockets for Wind.

in the air a few feet. These kites are fitted with a *bridle* having a loop to which the kite-string is attached. The

Digitized by Google

aerial and ground cables are provided with *plugs* to plug into the aerial switch and to the ground connection of the coil.

The grounded terminals of field outfits are seldom em-

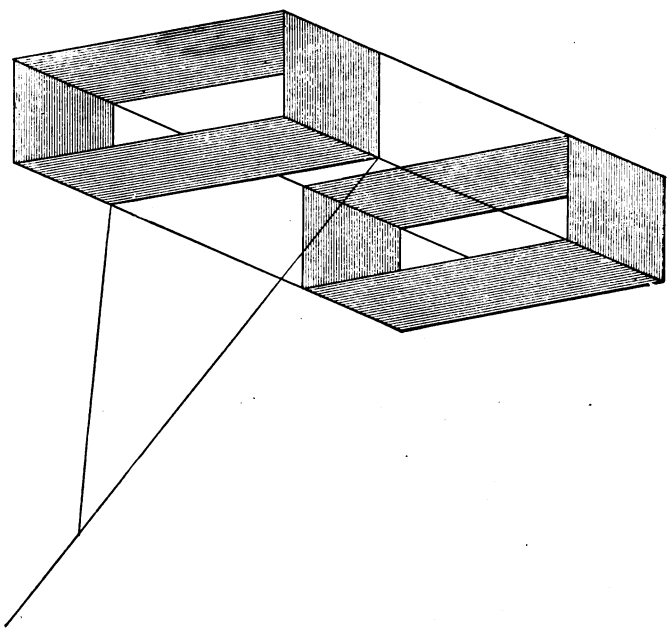

FIG. 67.—Blue Hill Box-kite.

bedded in the earth; the terminal wire or cable is attached to a roll of wire netting, like that used for chicken fences, and this is spread out evenly on the ground or dropped into water, if there is any; or what is just as good is to spread the netting out on a grassy plot, which provides

Digitized by Google

an excellent earth, for grass and other growing vegetation are conductors of electr city, and as the meshes of the wire net come in contact with the thousands of blades of grass, and these in turn have roots in the damp soil underneath, a fairly good ground is assured.

Digitized by Google

CHAPTER VI

WIRING DIAGRAMS FOR TRANSMITTERS

Wiring Diagrams.—It is not often that an operator, especially if he is a beginner, is called upon to undertake the installation of a wireless set unless it is under the direction of an experienced man "higher up." In commercial companies the experts selected for this important work are chosen as a rule from the ranks of the operators, the preference naturally being given to those who have shown a special aptitude for this class of work. In the United States Navy wireless telegraphy is under the supervision of the Bureau of Equipment, and officers versed in this branch of the art look after the installations of different ship and shore stations, while in the Army it is attended to by the Signal Corps and likewise in charge of competent officers.

It will be found useful, however, for the operator to know how the instruments are wired, and a necessity to understand their connections; but without a wiring diagram of the specific form of apparatus he is working

Digitized by Google

with, the novice would be lost in the maze of wires about him if he were given charge of a station. When a beginner accepts his first position, or an operator goes from one company to another, he will, it is safe to say, receive some instruction relative to the station he is to have charge of, and this may continue until he becomes perfectly familiar with the apparatus installed. By studying the wiring diagrams to follow, the operator will have little difficulty in tracing out the connections of any system he may be called upon to work. As to the placing of the apparatus on the operating table there is no hard-and-fast rule to be adhered to, but on the other hand the operator must use his best judgment and meet the circumstances in the most practical way. The key may conveniently be placed about the middle of the table, with the transmitting apparatus on the left-hand side and the receiving apparatus on the right-hand side. In shore stations there is more room, but it is doubtful if this is of any material advantage, for it is well to have the apparatus set up so that it forms a compact unit, since then every part is under the immediate and constant observation of the operator.

Wiring Diagram of an Ordinary Induction Coil, Interruptor and Condenser.—Where an ordinary induction coil is employed in sending, the spring interruptor is mounted on the same base, at the end of the coil, and the condenser is placed in the base, which is made hollow to receive it. By referring to the diagram Fig. 68 it will

Digitized by Google

be seen that one terminal of the primary of the induction coil leads direct to one of the binding-posts, placed on the outside and end of the base; the other terminal of the primary coil is connected to the fixed end of the vibrating spring; the current is completed through the adjusting screw and its support, which is connected to

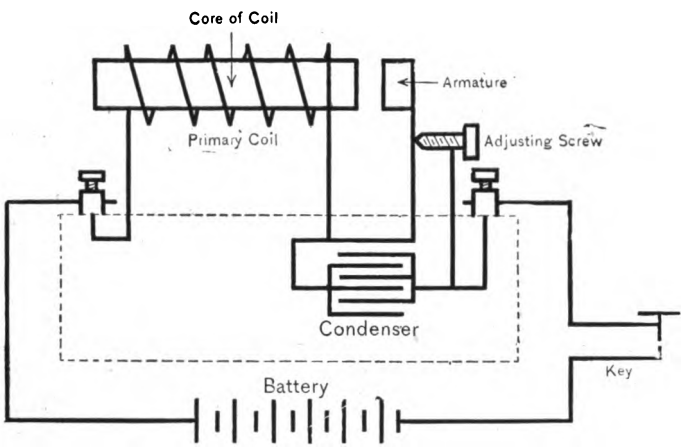

FIG. 68.—Wiring Diagram of Induction Coil, Interruptor, and Condenser. Dotted Lines Show Base of Coil.

the opposite binding post, also on the outside. Shunted around the spring and the adjustable screw is the condenser. The wiring, in so far as possible, is concealed in the base of the coil, leaving the binding posts only exposed, and to these are attached the key and the battery.

Wiring Diagram of Induction Coil with Independent Spring Interruptor.—While in the improved type of induction coil the spring interruptor is generally mounted

Digitized by Google

on the base with it, it is also occasionally mounted separately, this being possible since its action does not depend on the magnetization and demagnetization of the core

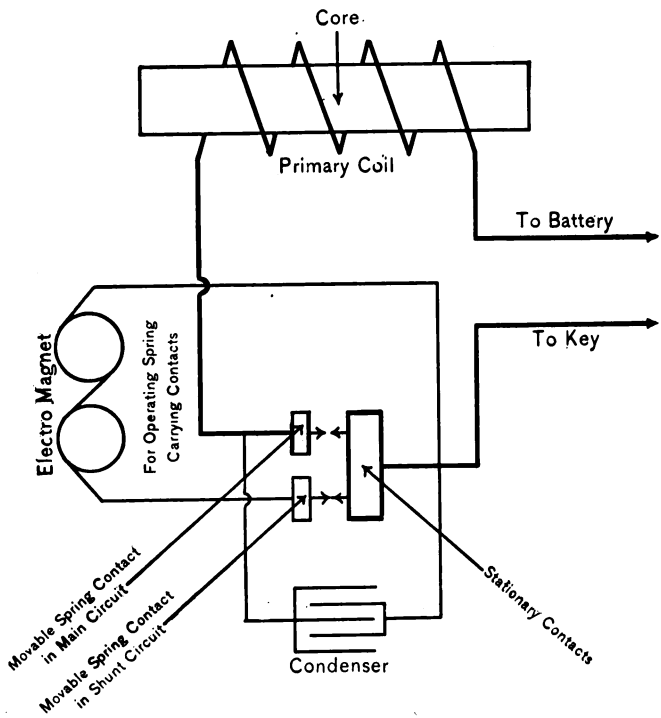

FIG. 69.—Wiring Diagram of Induction Coil with Independent Interruptor.

of the coil. The independent interruptor is provided with two sets of make-and-break contacts, the first formed of heavy platinum wire and placed in the main circuit, as indicated in Fig. 69 by the heavy lines, and the second

Digitized by Google

of lighter platinum points, as shown by the light lines. Following the heavy lines it will be seen that the battery or other source of electromotive force is connected on one side to one terminal of the induction coil, its opposite end leading to the heavy platinum movable contact attached to the upper part of the stiffest of the two springs; when the spring is in its normal position, namely, when there is no current flowing through the circuit, it makes contact with the heavy platinum stationary contact-point which is connected to the battery. Under these conditions the smaller contacts in the shunt circuit are also in contact; thus both the main circuit through the primary of the induction coil and the shunt circuit through the electromagnet are closed in so far as the contact-points are concerned, but open through the key. When the circuits are closed by means of the key the current flows through the shunt as well as the main circuit and hence energizes the coil and the electromagnet, when the latter breaks both circuits by attracting the armature carried by the spring on which are attached the movable contacts. The condenser, frequently an adjustable one and mounted in a separate box, is shunted across the main contact-points as shown.

Wiring Diagram of Induction Coil with Mercury Turbine Interruptor.—Where a mercury turbine interruptor is used it is connected in series with the primary coil, the key, and the source of current, as in a simple spring interruptor. A condenser is shunted around the interruptor in the same manner. Since a small motor

Digitized by Google

is required to rotate the interruptor, a circuit is led off from the main line to the motor, while a variable resistance or rheostat is inserted to regulate the current, all of which is shown in Fig. 70.

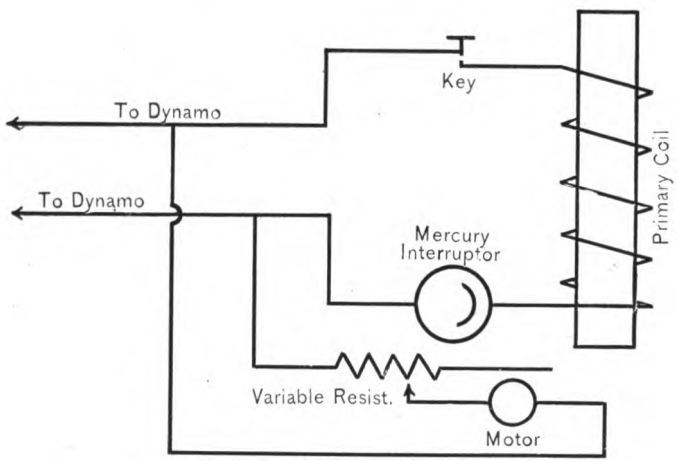

FIG. 70.—Wiring Diagram with Mercury Turbine Interruptor.

An Induction Coil with Electrolytic Interruptor.—Where an electrolytic interruptor is used it is connected in series with the primary coil, the key, and the source of current, as in a simple vibrating-spring interruptor. Since an electrolytic interruptor has a small inherent capacity of its own, it is not absolutely necessary to use a condenser shunted around it, but a small condenser can be used to some advantage.

Keys.—As previously stated in Chapter IV, some systems of wireless telegraphy provide keys with con-

Digitized by Google

densers to cut down the sparking at the contact-points; many are furnished with magnetic blowouts, and again in others the break takes place under oil.

(*a*) Where a condenser is used it is shunted around the contact-points of the key just as in the case of the interruptor, and as the condenser is in the base of the

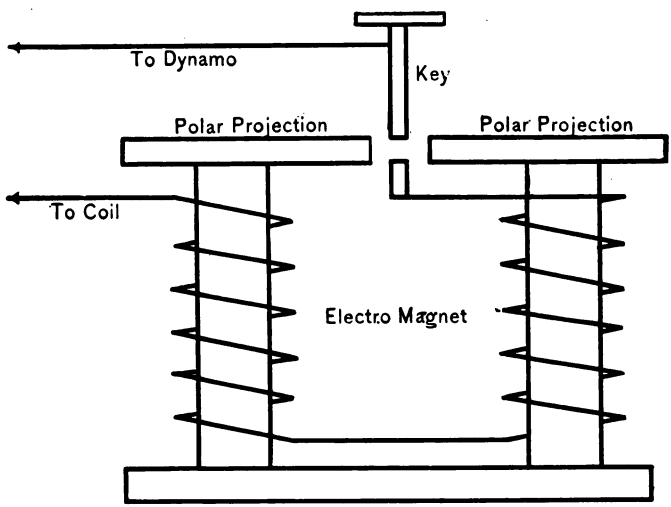

FIG. 71.—Connections of Key and Magnetic Blowout.

key, the connections are always made when the key is assembled.

(*b*) This latter statement is also true where a magnetic blowout is used, but since new phenomena are involved the above diagram, Fig. 71, may prove of value. It will be observed that the coils of the magnets, the polar projections of which are oppositely disposed at right angles to the contacts of the key, are connected in series with

Digitized by Google

the key, coil, and source of energy. The diagrammatic sketch of the circuit shows the actual position of the magnets, the contacts of the key, and the connections.

(*c*) Keys whose contacts break in oil are connected in series with the primary and source of energy, as in the two preceding cases.

Diagram of a Simple Induction Coil Transmitter.—The diagram, Fig. 1, Chapter I, shows a simple open circuit transmitter using an induction coil with a vibrating interruptor.

Diagram of a Simple Transformer Transmitter.—Instead of the induction coil excited by direct current a transformer of the open or closed core type may be employed to energize the aerial-wire system. There may be cited three reasons for the use of this arrangement, namely: (1) there are places where only alternating current is available; (2) the interruptor of the direct-current induction coil, which is sometimes a very troublesome device, is done away with; and (3) larger amounts of energy may be transformed from the initial current into electric oscillations. A transmitting system of this kind in its simplest form is shown in Fig. 72, and a reference to the diagram will make the connections clear; the mains of an alternating-current generator connect with the primary of the transformer through the medium of a pair of choke coils, the latter being made like those described on page 68 except that they are larger and better insulated. The secondary of the transformer is connected to the spark-gap as in the case of an ordinary

Digitized by Google

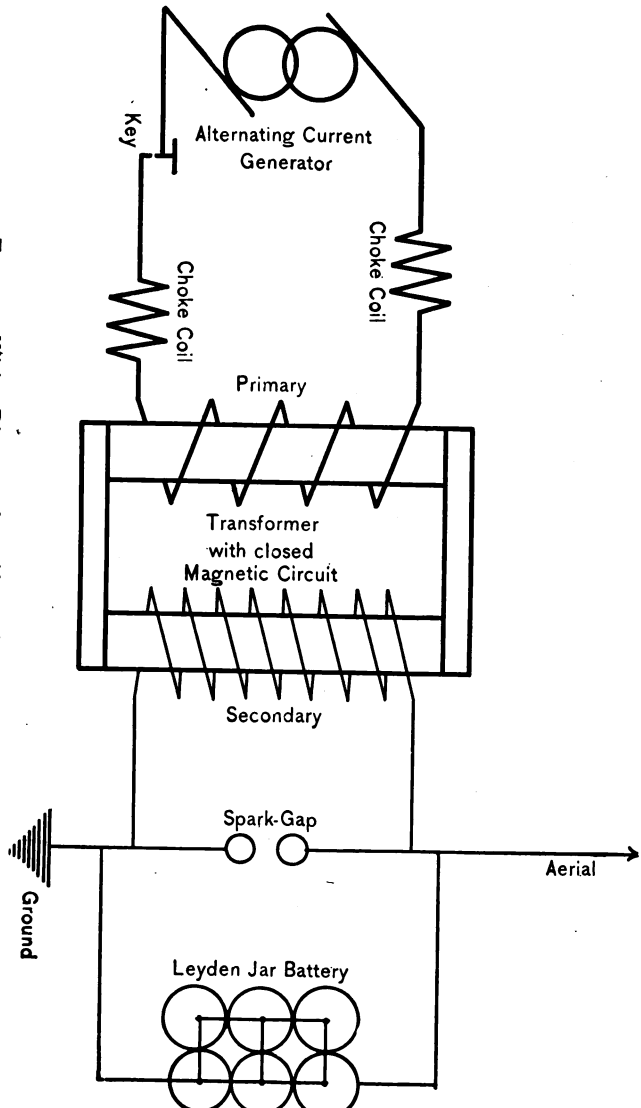

FIG. 72.—Wiring Diagram of an Alternating-current Transmitter.

Digitized by Google

induction coil and a battery of Leyden jars in parallel with the spark-gap as shown. The aerial wire is connected to one side of the spark-gap, and the grounded wire to the opposite side. In tuned transmitters using alternating current, the secondary coil of the transformer, Leyden-jar battery, and inductance coil are connected as in the diagram Fig. 73 or 74.

Diagram of the Primary or Low Tension Circuits.—The wiring of the primary circuits of an induction coil and a transformer transmitter is well brought out in the diagrams Figs. 70 and 72. Some details are lacking, but these are supplied and will be found in the diagram showing the complete transmitter.

Diagram of Conductive Coupled Oscillation Circuits.—This is the simplest type of tuned transmitter. The terminals of the secondary coil are connected with the spark-balls forming the gap through which the spark takes place. From one of the spark-balls a wire leads to the inner coatings of the battery of Leyden jars, these being connected in parallel by means of chains and plugs. The outer coatings of the Leyden jars, also in parallel, are connected to the aerial wire through a cut-out spark-gap, as shown in Fig. 73; the lower end of the aerial is connected with the earth through the inductance coil by means of a flexible wire ending in a plug or spring contact. A transmitter having its open and closed oscillation circuits connected in this manner is termed a direct or conductive *coupled* system and is of course a compound system.

Digitized by Google

Diagram of Inductive Coupled Oscillation Circuits.—Another method of coupling oscillation circuits much in favor at present is shown in Fig. 74; here the secondary of the induction coil connects with the spark-gap and

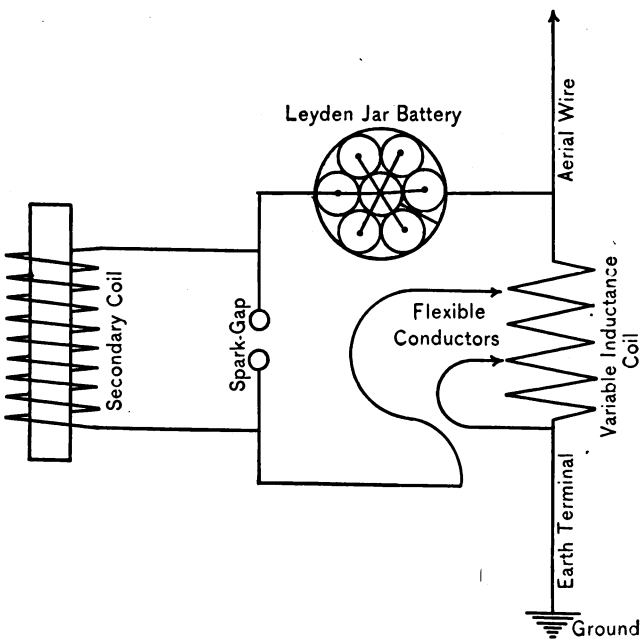

FIG. 73.—Wiring Diagrams of High Tension Close Coupled Circuits.

the opposite end of the earth. The purpose of interposing this transformer is so that the potential of the oscillations set up in the closed circuit may be increased in the open circuit.

Digitized by Google

Wiring Diagram of a Complete Telefunken Transmitter.—A complete transmitting apparatus such as is

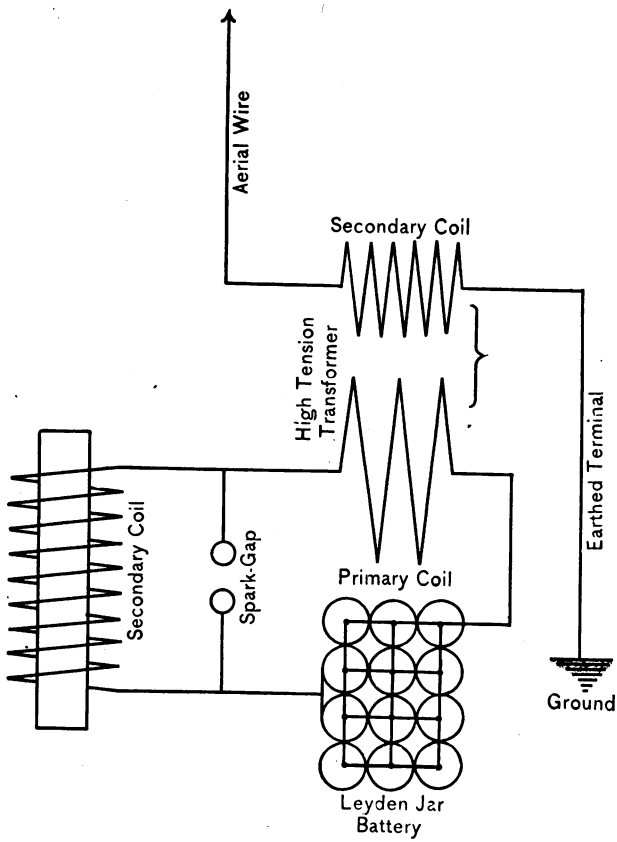

FIG. 74.—Diagram of Loose Coupled Transmitter.

largely used in the United States is shown in Fig. 75. It is a combination of the primary circuits Fig. 70 and the secondary circuits Fig. 73 coupled together and with

Digitized by Google

all the details of the system added. Following the primary circuit from the mains it will be seen that one

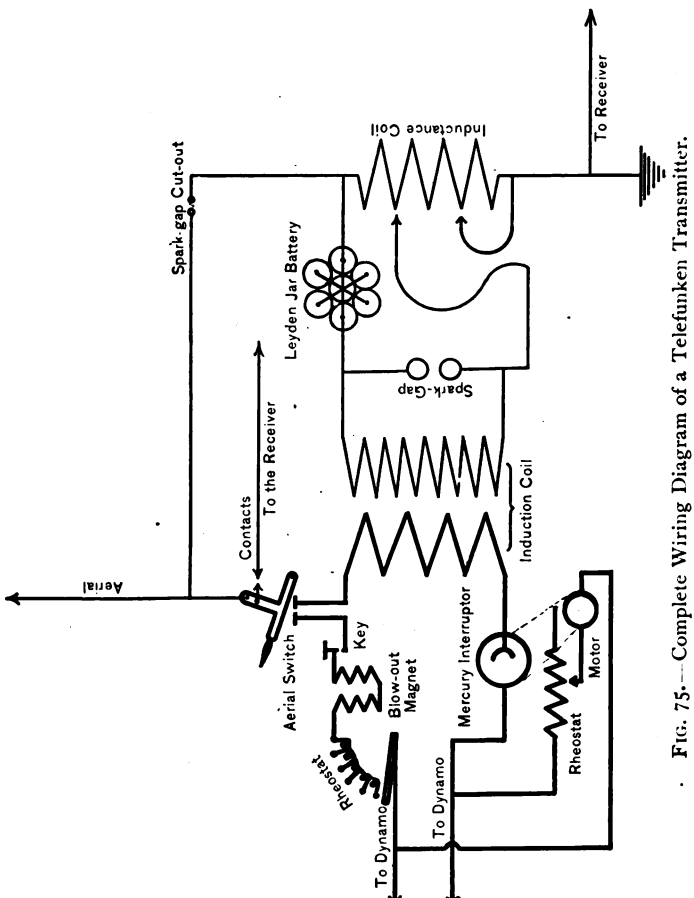

FIG. 75.—Complete Wiring Diagram of a Telefunken Transmitter.

side leads to a rheostat, for regulating the current flowing through the primary coil and interruptor, thence the

Digitized by Google

circuit continues through the primary, the interruptor, the key, the blowout magnet coils, and to the fixed contact of the aerial switch. From the other fixed contact of the aerial switch the circuit leads back to the mains, as shown by the heavy lines. A second circuit is derived from the main circuit, and this conducts the current to the motor for rotating the turbine interruptor, these being connected by a belt illustrated by the dotted lines. Interposed in this circuit is a rheostat for controlling the speed of the motor. The secondary of the coil is connected with the spark-gap, and in parallel with the latter is the Leyden-jar battery and the variable inductance coil with its flexible conductors.

From a point between the Leyden-jar battery and the inductance coil a wire connects with the aerial, though the open circuit is broken by the spark-gap cut-out, the purpose of which is to prevent the impressed oscillations set up in the aerial when receiving from flowing through the transmitter. On the other hand the minute spark-gap does not prevent the oscillations set up by the transmitter from surging through the system.

Diagram of a Complete Marconi Transmitter. In the Marconi system as now installed on Atlantic liners the transmitter comprises an induction coil giving a 10-inch spark and provided with a simple spring interruptor mounted on the base with the coil and operated by the core of the latter, or an alternating current transformer developing 25,000 volts at the terminals of its secondary. In either case the source of energy is taken

Digitized by Google

from the mains of the ship's generating unit. The primary circuit includes a primary coil, a key, and the source

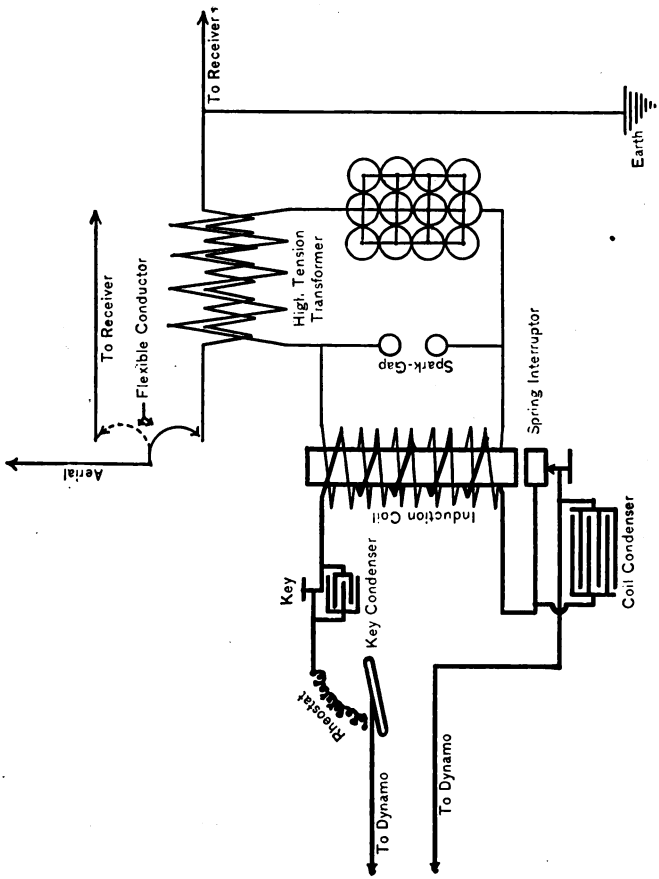

FIG. 76.—Complete Wiring Diagram of a Marconi Transmitter.

of energy. The terminals of the secondary coil lead to a spark-gap, and in parallel with this circuit are connected

Digitized by Google

in an inductance coil and a battery of Leyden-jars, the outer coatings leading to one side of the spark-gap and the inner coatings to one terminal of the inductance coil. There are twelve of the jars, and a switch is arranged on top; the three jars on either end may be cut in or out according to the capacity desired. The inductance coil forms the primary of a high-tension transformer the secondary of which connects the aerial with the ground terminal. In this system the inductance coil is not wound around the Leyden-jars, but the transformer is mounted in a case and attached to the wall. The wiring diagram is shown in Fig. 76.

Digitized by Google

CHAPTER VII

WIRING DIAGRAMS FOR RECEPTORS

Circuit Connections.—In order to master with the least difficulty the various connections of a wireless telegraph receptor, the student should bear in mind that the receiving devices, like those of the transmitter, may be divided into two general classes, namely, those that are not tuned and those that are tuned, or in other words into simple open circuit resonators and those having compound systems. These systems may again be subdivided into those that use detectors of the coherer type in conjunction with relays and Morse registers, and those that use auto-detectors of the electrolytic, magnetic and crystal types in combination with telephone receivers.

The wiring of a simple open circuit resonator is fixed in its arrangements, and there is nothing for the operator to adjust except the relay and instruments in the low-voltage or internal circuits. This style of equipment is very seldom found in use, unless in some antiquated station, but an understanding of its connections will enable the beginner to grasp the more complex systems

Digitized by Google

of tuned receptors, even as it furnished in the earlier history of the art a stepping stone for the improvements that have resulted in tuning as we know it to-day. Those receptors in which tuned *resonators*, as the aerial wire system of receptors are termed, may employ either a detector of the coherer type with a relay and a Morse register in the internal circuit, or an auto-detector and telephone receiver, depending on the make of apparatus installed and the class of work they are intended for. The auto-detector receptor has practically superseded the coherer receptor for all classes of work.

Diagram of a Simple Open-circuit Resonator.—Since the received waves are transformed into electric oscillations in the receiving aerial, before there can be any electrical manifestations in the local circuit the aerial and grounded wire must be connected directly or indirectly to the detector. Where the aerial wire is connected directly to one side of the coherer and the ground-wire to the opposite side, as in Fig. 77, the resonator system cannot be tuned to the length of the wave received and much of the energy is thereby wasted. Systems utilizing simple open-circuit radiators and resonators have been entirely supplanted by tuned apparatus for all commercial installations.

Elementary Diagram of the Detector and Cell Circuit.—In order that the effects of the oscillations set up in the aerial wire system may be translated into the alphabetic code and perceived either visually or audibly an internal circuit is provided by connecting a detector, a

Digitized by Google

dry cell, and some kind of an indicating device, such as a galvanometer, a telephone receiver, or a relay working a register as shown in Fig. 78, assuming that the resona-

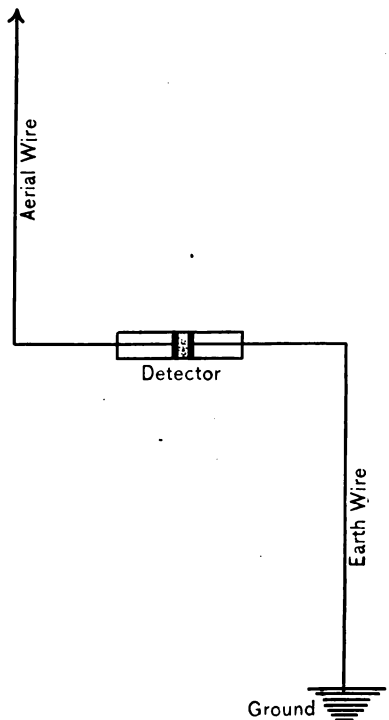

FIG. 77.—Simple Open Circuit Resonator.

tor system used is of the simple open-circuit type above described. That all of the energy of the oscillations may be impressed on the coherer, non-inductive resistances, or choke-coils as they are called, or polarization-cells, are usually inserted in the internal circuit to prevent

Digitized by Google

the oscillations from surging through the instruments which offer a path of less resistance.

Diagram of a Conductive-coupled Resonator.—The general diagram, Fig. 79, is of a compound-circuit resonator

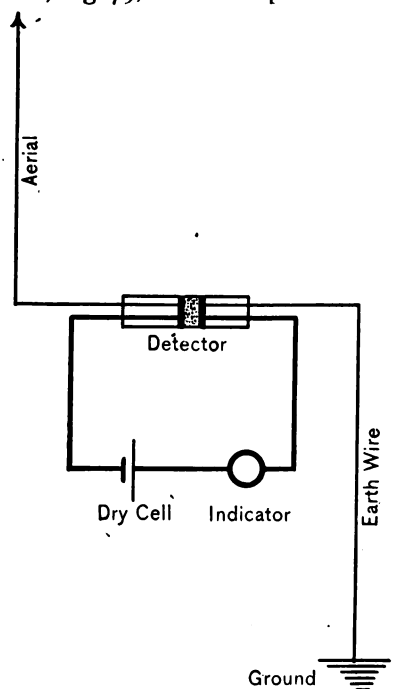

FIG. 78.—Diagram of Detector and Cell Circuit.

system in which the aerial wire connects with one end of an inductance coil, while the opposite end of the latter leads to earth. This comprises that part of the resonator equivalent to the open circuit, the closed circuit being formed by connecting the inductance-coil,

Digitized by Google

the coherer or other detector, and the condenser in series, as shown in the diagram. Since the open circuit and closed circuits are connected directly to each

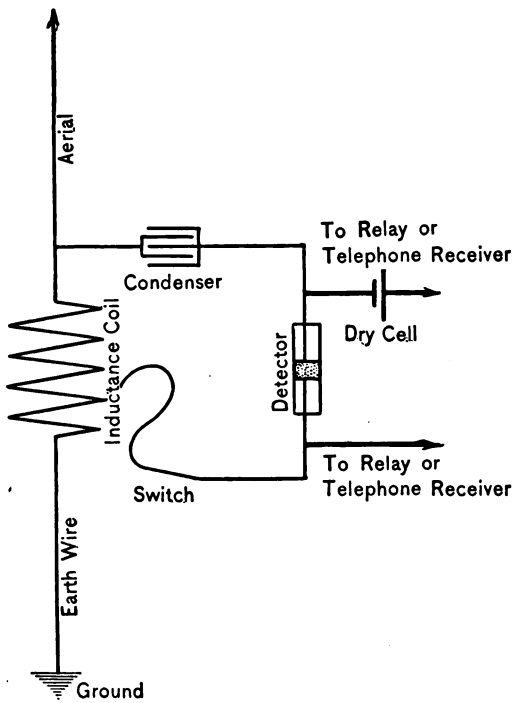

FIG. 79.—Compound Conductive Coupled Resonator System.

other, it is termed a direct or *conductive-coupled system.* This is the form of oscillating circuits used in the receptors in the Telefunken system. In the actual receptor means are provided for varying the value of inductance as is

Digitized by Google

the case of the spark-gap, and the capacity is also made adjustable, or should be.

Diagram of an Inductive-coupled Resonator.—In a compound-circuit resonator where an inductive coupling is used it is understood to mean that the aerial wire connects with an inductance coil and the latter with a grounded terminal as in the former instance, but this inductance not only serves to tune the circuit, but also as the primary coil of a small transformer, the latter sometimes being called a *jigger*. The secondary of the transformer makes up a closed circuit with the coherer through one or two small condensers, as shown in Fig. 80. In practice the condensers and the coils are arranged so that their values may be changed and the periods of oscillation in the open and closed circuits may be tuned to each other and so be productive of the best results.

Wiring Diagram of Relay Connections.—Of the instruments used in a printing receptor the relay only has double contacts. Relays of whatever type, ordinary or polarized, are provided with four binding-posts, the coils of the magnet being connected to the first two, while the armature lever carrying on its end a platinum point and the stationary platinum point with which it makes contact are connected to the other two posts, as shown in Fig. 81. The coherer and the dry cell are connected in series with the relay magnets and the Morse register, tapper, and battery in parallel with the contact points.

Digitized by Google

Wiring Diagram of Aerial Wire System, Coherer, and Relay Circuits.—The coherer and relay circuits of

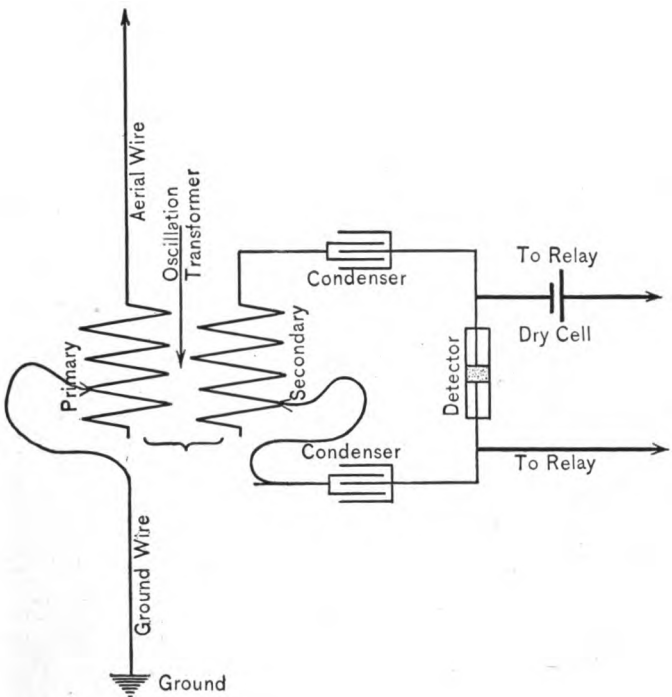

FIG. 80.—Compound Inductive Coupled Resonator Circuit.

a receptor of a Telefunken set is shown in Fig. 82, and while the receptors of this type in other systems may not be connected exactly as in this one, there is very little difference and the accompanying diagram will suffice

Digitized by Google

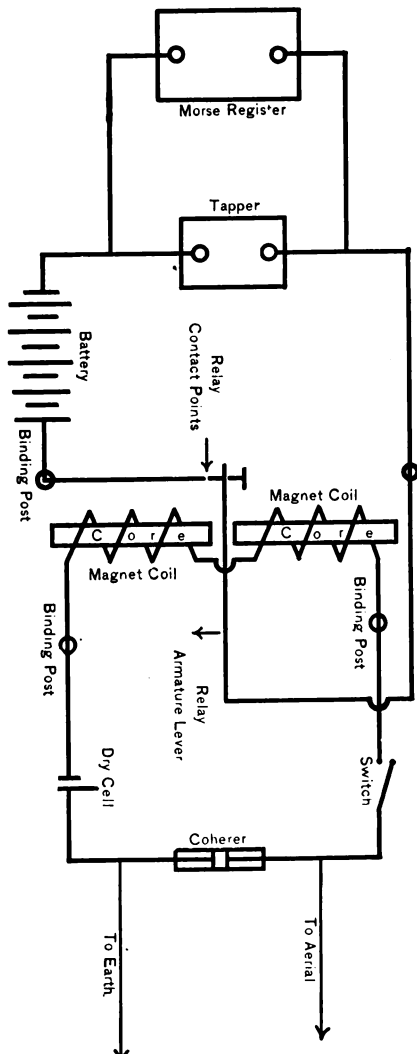

FIG. 81.—Wiring Diagram of Relay Connections.

Digitized by Google

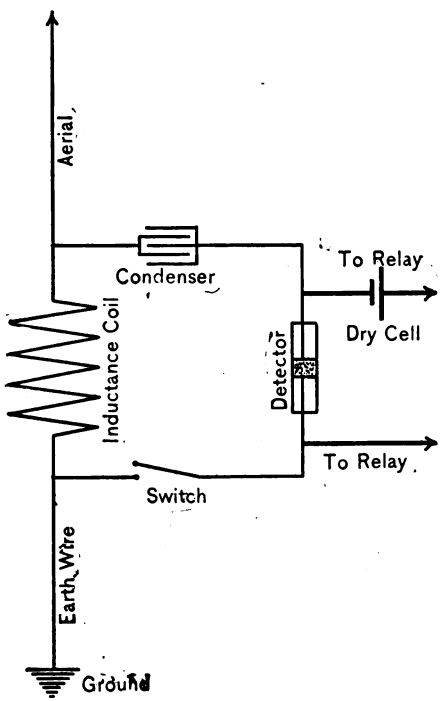

FIG. 82.—Compound Close Coupled Resonator System.

Digitized by Google

to enable the operator to connect up any receptor using a coherer and relay. The tuning coil is provided with three adjustable plugs all of which are connected with flexible conductors; the upper plug leads to the aerial through a variable non-inductive resistance, the purpose of which is to cut down the energy of the received electric waves when the distance between the transmit ting station and the receiving station is comparatively short; a second and shorter aerial wire may be used instead of the long-distance aerial with the resistance thrown in if preferred, and some of the Atlantic liners are thus equipped. The two lower plugs, also fitted with flexible conductors as mentioned above, are connected to the lower end of the tuning-coil, which in turn leads to earth.

The ends of the tuning coil are connected in series with the coherer, dry cell, coils of the relay, and a small variable resistance, this arrangement forming the closed circuit. Bridged across this closed circuit is a small spark-gap, so that in case an electrical storm should occur, or when the atmospheric conditions are such that the aerial system becomes unduly charged by electricity, these charges instead of passing to the earth through the coherer, which would render it unfit for further use by destroying its sensitiveness, will pass through the alternative path offered by the spark-gap, since static charges suddenly released will break down a thin film of air rather than force its way through the filings of a coherer. It may again be asked why it does not dissipate its energy into

Digitized by Google

the earth through the inductance coil, but it must be remembered that inductance has a very great retarding influence on an electric current.

Also bridged across the closed circuit and in parallel with the spark-gap is a pair of small condensers that may or may not be adjustable, but should be in order to obtain the best results. These small condensers not only tend to check the discharge of atmospheric electricity through the coherer, but they also serve to prevent the current from the dry cell from leaking through the earth connections and tuning coil.

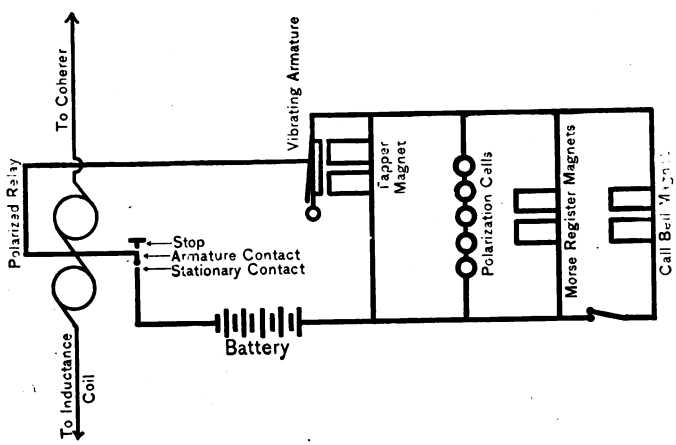

FIG. 83.—Wiring Diagram of Internal or Local Circuits.

Wiring Diagram of Internal Circuits.—The internal circuits, that is those that are closed through the medium of the relay, include the tapper, polarization cells, Morse register and a call bell. These are connected up in parallel, as indicated in the diagram Fig. 83, and are consequently

Digitized by Google

operated from the same battery of dry cells. The polarized cells are connected in series, and these are placed across the contact-points of the relay; they absorb the excess energy produced by the condenser action of the circuit, which would otherwise cause an excessive spark to pass between the relay contacts and set up oscillations of small magnitude but amply great enough to affect the filings of the coherer, just as would a received impulse.

The magnets of the decoherer or tapper, the Morse register, and the call-bell are wound to the same resistance, since these are energized by the same battery. A switch is provided so that the bell can be cut out after ringing up the operator.

Wiring Diagram of a Complete Receptor.—This is shown in Fig. 84, and is a combination of Figs. 82 and 83 coupled together, when they present a much more complex aspect than do the different circuits shown separately. All the apparatus above described except the tuning coil is mounted on the receptor stand, as is also a switch, especially designed for the purpose, for breaking the connection of the aerial in receiving and which simultaneously closes the primary circuit of the sending apparatus.

Wiring Diagram of a Receptor with Magnetic Detector.—In the Marconi system now in commercial use in this country a magnetic detector is employed, and the following connections shown in Fig. 85 are used. A tuning coil is connected to the aerial wire by a flexible conductor terminating in a plug. A second flexible wire

Digitized by Google

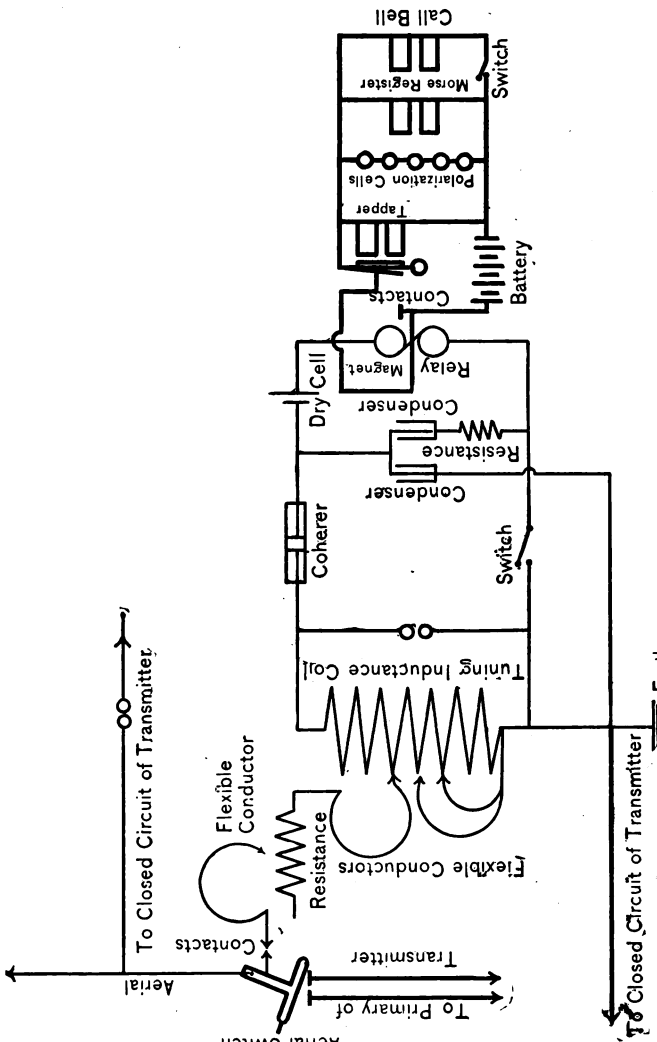

FIG. 84.—Complete Wiring Diagram of a Telefunken Coherer Receptor.

Digitized by Google

with a plug end makes contact with one of the middle turns of wire and leads to the earth direct. A third

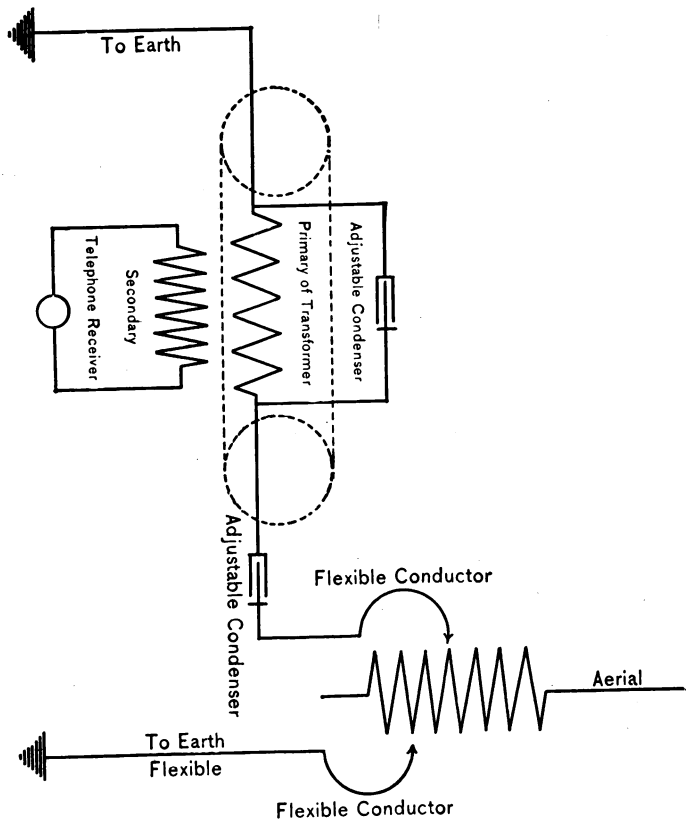

FIG. 85.—Wiring Diagram of Marconi Magnetic Receiver. Dotted lines show moving iron core.

flexible wire with a plug end makes connection with a lower turn of the inductance coil; this last named conductor leads to a small adjustable condenser, which in turn connects to one end of the primary of a small transformer coil, while its other end is joined to a second earth-

Digitized by Google

terminal; shunted around this primary coil is a second adjustable condenser. Around the primary of the transformer coil is wound a secondary coil of finer wire, the terminals of which connect to the binding-posts of a telephone receiver.

Wiring Diagrams of Receptors with Electrolytic and Crystal Detectors.—Electrolytic and crystal detectors

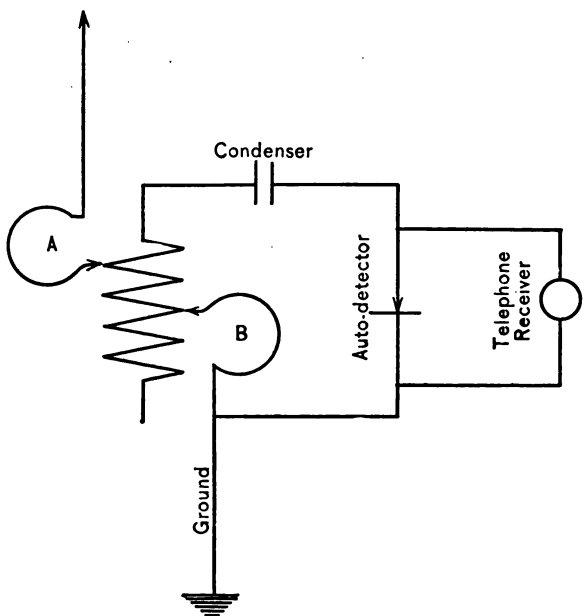

FIG. 86.—Wiring Diagram for Crystal Detector Receptor.

are largely used in commercial systems and by the Army and Navy departments. There are various methods for hooking them up with the aerial but the accompanying

Digitized by Google

diagrams are typical and are probably the best available at the present time. In Fig. 86, the aerial is connected to a double-slide tuning coil through the sliding contact *A*, and the ground is coupled in on the opposite side through the slide *B*. The tuning coil leads to a small

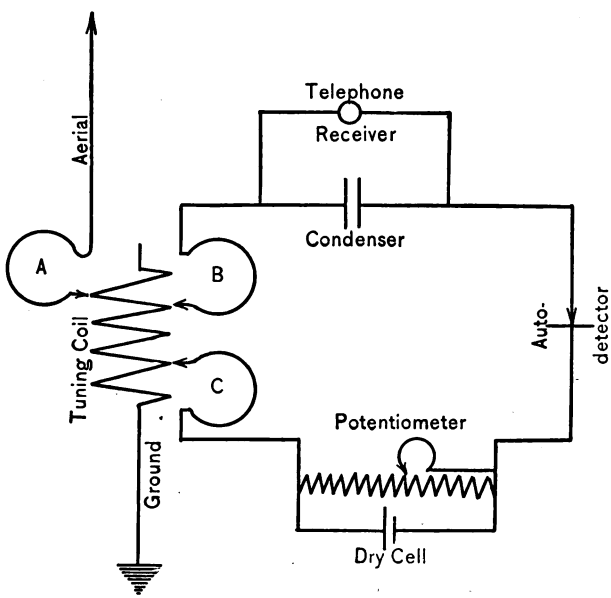

FIG. 87.—Wiring Diagram for Crystal or Electrolytic Detector.

condenser of fixed value, which with either an electrolytic or a crystal detector is connected in series with the lower end of the coil through the slide *B*; the telephone receiver is merely shunted around the detector.

Where it is desirable to use a small direct current in connection with a detector the connection may be made as

Digitized by Google

shown in Fig. 87. For this purpose a triple-slide tuning coil is advisable. The aerial is connected to the tuning coil through the slide *A* and the ground is joined directly to the lower end of the coil. The condenser, the detector and the potentiometer are connected in series with the tuning coil through the slides *B* and *C*. The telephone

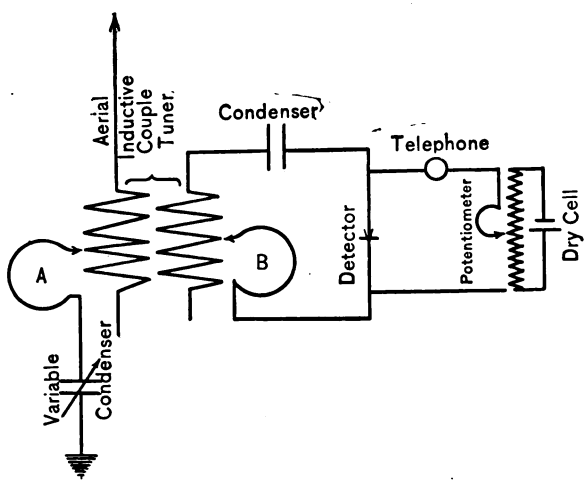

FIG. 88.—Wiring Diagram for Auto-detector Receptor with Oscillation Transformer.

receiver is shunted around the condenser and a dry-cell is shunted around the resistance of the potentiometer.

Fig. 87 is a wiring diagram of an auto-receptor in which a tuning oscillation transformer is used. The aerial connects with the upper terminal of the primary coil of the transformer. The coil is grounded through a sliding contact *A*, a variable condenser being connected in the ground wire. A fixed condenser and the detector are

Digitized by Google

connected in series with the secondary of the transformer through the upper terminal of the coil and the sliding contact *B*. The telephone receiver and potentiameter are shunted around the detector and finally a dry cell is shunted around the resistance of the potentiometer.

The detector circuits of Figs. 86 and 87 may be connected with the oscillation transformer of Fig. 88, or the aerial wire circuits of Figs. 86 and 87 may be used in combination with the detector circuit shown in Fig. 88. By changing the circuits around a variety of hook-ups may be had to suit individual requirements.

Digitized by Google

CHAPTER VIII

THE APPARATUS IN ACTION

Preliminary Remarks.—Having explained the elementary theory upon which the transmission and reception of electric waves are based, and having described the various apparatus used for setting up and indicating these waves, it will be well, before the methods of adjusting the instruments are discussed, to follow out in detail the processes involved when the apparatus is in action; to do this we must begin by following the low-voltage current as it is delivered by the generator through the induction coil, or transformer, at the sending station, and then ascertain how the energy of the impressed oscillations is supplemented by a small direct current from a dry cell at the receiving station.

Action of an Induction Coil.—The principal functions in the conversion of a low-voltage current into a high-tension charge—such as we have immediately prior to the transformation of the static charge into kinetic energy, i.e., electric oscillations, by the electric spark, or disruptive discharge—take place through the medium of the induction coil and hence is due to mutual induction. The making and breaking of the primary circuit by the interruptor, and the re-

Digitized by Google

duction of the spark between the contact-points of the latter by means of the condenser, are details that are not only interesting in their theoretical aspects, but of vital importance in the successful working of the transmitter. Before considering the action of these devices a brief summary of the principles of mutual induction will serve to make the operation of an induction coil comprehensible and the more complex phenomena of the interruptor and condenser understandable.

(*a*) When the key is made to close the primary circuit see Fig. 89, and the direct current is permitted to flow

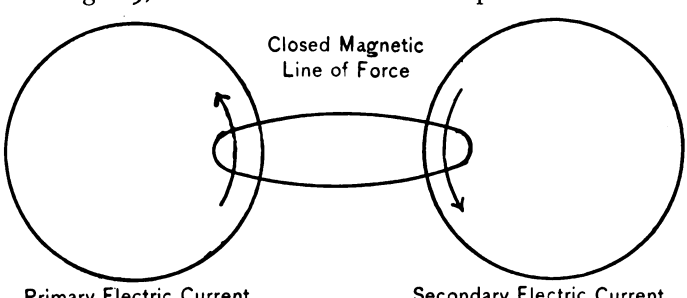

FIG. 89.—Transformation of Electric Current into Magnetic Line of Force, and the Latter Back into an Electric Current.

through the inductor or primary of the induction coil, a large per cent of the electric energy is transformed into magnetic energy in the form of closed or elliptical lines of force that expand like those produced on the surface of a pond when a stone is dropped into it. If a core of soft iron is placed inside the primary coil, these magnetic lines of force may be concentrated, for iron possesses a greater permeability than air and the non-magnetic metals. Fig.

Digitized by Google

90 shows how the magnetic lines of force which are formed at right angles to the diameter of the turns of wire are carried through the iron core and form closed loops through the air surrounding it.

(*b*) Let us ascertain now what the action will be when there is another or second coil of wire slipped on and over

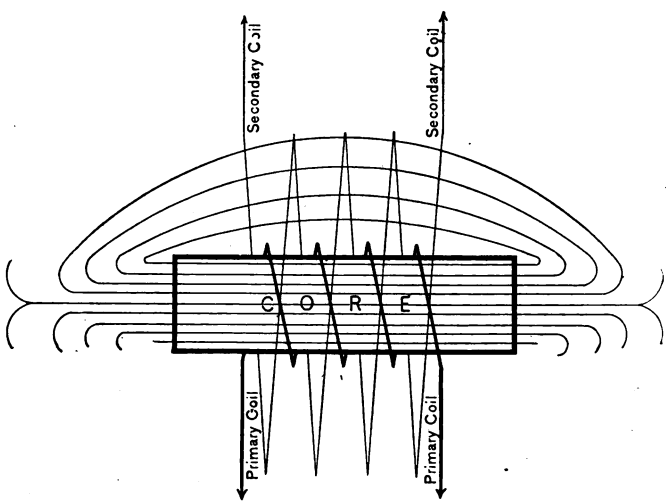

FIG. 90.— Diagram showing How Magnetic Lines of Force are Set Up in the Core of a Coil, and How the Loops Intersect the Secondary Coil.

the first or pimary coil. Assuming that the circuit is closed through the key, and that the electric current is converted into the magnetic lines of force as explained, the latter in passing from one pole of the core to the other will intersect or thread through the secondary coil; when this condition of affairs takes place the magnetic energy will be transformed back into an electric current in the outer

Digitized by Google

coil. The current thus set up, however, is of but momentary duration and takes place only on closing the primary circuit or on breaking it, the current flowing first in one direction and then in the other, for there must be either a rise or a fall in the intensity of the magnetizing force in order to produce an electric current in the turns of wire intersecting it. The purpose then of the interruptor is to *make* and *break* the circuit as rapidly and as sharply as possible.

(*c*) If an induction coil was wound with a primary and a secondary coil of the same number of turns of wire, the potential or voltage impressed on the former would be developed at the terminals of the latter, if we regard the losses due to the transformation as negligible. In this case the *ratio of transformation*, as it is termed, would be unity, for the law of transformation states that the ratio is directly proportional to the number of turns of wire on the primary and the secondary coils, while the amount of energy delivered at the terminals of the secondary is practically equal to that which flows through the primary; consequently the potential of the secondary may be exceedingly great when compared with that of the primary, the amount of current being, of course, relatively less.

(*d*) The condenser shunted around an interruptor is inactive when the make-and-break points of the latter are in contact and the full value of the current is flowing through the primary circuit, but the instant the contact-points begin to separate or break, the increased resistance causes the primary current to begin to charge the con-

Digitized by Google

denser, and this continues until the charge is maximum or the fixed and movable points of the interruptor again make contact. An interruptor where the break takes place suddenly, requires a condenser of much smaller capacity than where the break consumes a longer time; this must not be taken to mean the period of interruption, that is, the length of time to complete the cycle between a make and a break, but the time measured from the instant the break begins to take place until the current ceases to flow between the contact-points.

The reason a smaller condenser can be used where the break is sudden is that there is less time for the potential of the primary to rise to a point where it can produce an excessive spark. Without the condenser it is impossible to break the circuit very quickly, for, though the mechanical portion of the interruptor works at the same speed, the large spark produced between the contact points heats the air between them, rendering it a good conductor, and the current continuing to flow prevents the potential from falling from its highest value to its lowest value in the shortest possible time. On the other hand the condenser should have the smallest capacity that will effectually reduce the sparking at the interruptor contacts. When these conditions are properly fulfilled the secondary coil will develop a potential difference at its terminals that will give the longest spark possible with the coil used.

Action of a Transformer.—Where a transformer is used instead of an induction coil there is no need of an interruptor, and in order to obtain the maximum and

Digitized by Google

minimum values of electromotive force necessary to energize the secondary coil a generator producing an alternating current must be resorted to; this arrangement is shown in Fig. 72, Chapter VI. Here the same laws of mutual induction are in evidence as in the case of the induction coil. Where transformers are employed the potential at the terminals of the secondary coil seldom exceeds 50,000 volts, and more often only 25,000 volts are developed. That a greater amount of energy may be utilized in the production of the oscillating currents, the terminals of the secondary are connected with the inside and outside coatings of a battery of Leyden jars; when the latter are charged to their maximum capacity they discharge across the spark-gap of the oscillation system.

The Action of a Simple Sending System.—In one of the earlier chapters the first principles of the disruptive discharge, electric oscillations and electric waves were discussed and their elementary theoretical functions were stated. A simple oscillation circuit together with the high-tension secondary circuit and low-voltage primary circuit is shown in Fig. 91; it will be observed that these are drawn as separate parts, for, while they are physically connected at all times and electrically connected part of the time, there are certain periods when their functions are quite as distinct as though the circuits were entirely removed from each other.

For instance, after the secondary is energized by the action of the current flowing in the primary, it charges the opposite arms of the oscillation circuit formed by the

Digitized by Google

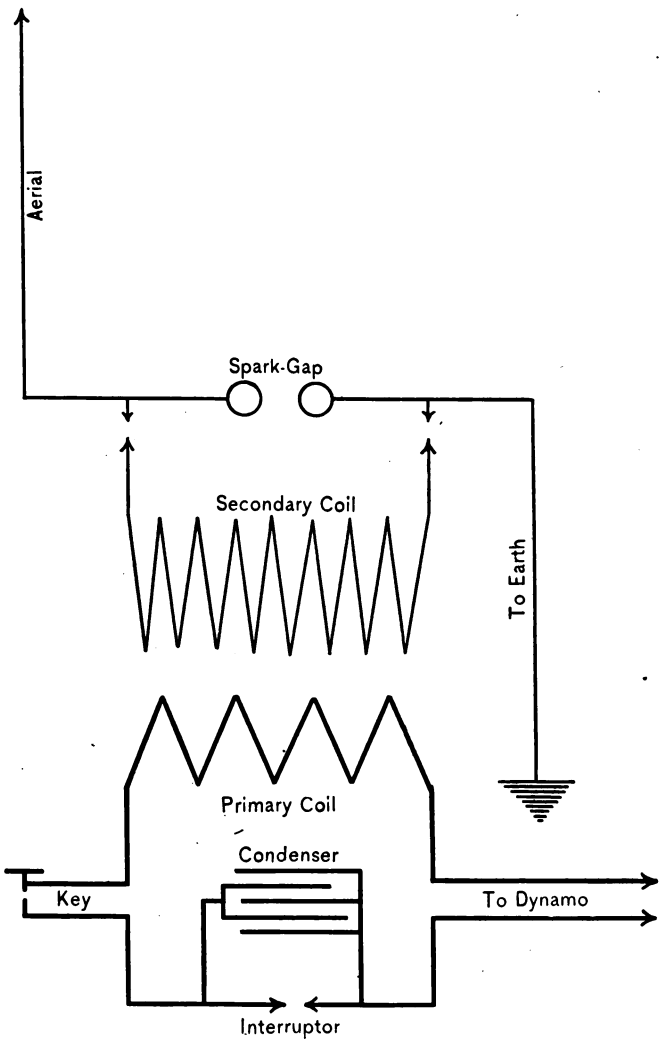

FIG. 91.—Diagram of Action of a Simple Sending System.

Digitized by Google

aerial wire on the one side and the grounded terminal on the other. The high-potential energy alternately changes its direction, as we now know, each time the primary circuit is made and broken, hence its frequency of alternation is comparatively low. When this low-frequency but high-potential current flows into the oscillation system its energy is no longer kinetic but static, and it is therefore at rest, like a gas under pressure, until it becomes sufficiently great to puncture the insulating partition of air in the spark-gap.

When this action takes place the static now becomes kinetic energy, and an exceedingly high frequency of alternation is produced in the circuit, when it is termed an oscillating current. As this high-frequency and high-potential current oscillates through the aerial-wire system its energy is changed into an altogether different form, very much as in the case of low-voltage current electricity changing into magnetic lines of force, in that it sets up a disturbance in the ether and at right angles to the wire conducting the oscillations, but instead of closed lines of force the propagation assumes the form of undulations termed electric waves.

Action of a Conductive-coupled Sending System.—Where an open and a closed circuit are coupled together, as shown in Fig. 92, the spark is produced in the closed circuit, and the high-potential and high-frequency currents surging through the system thus formed is imparted to the open-circuit system, which radiates the energy as electric waves. It will be observed by referring

Digitized by Google

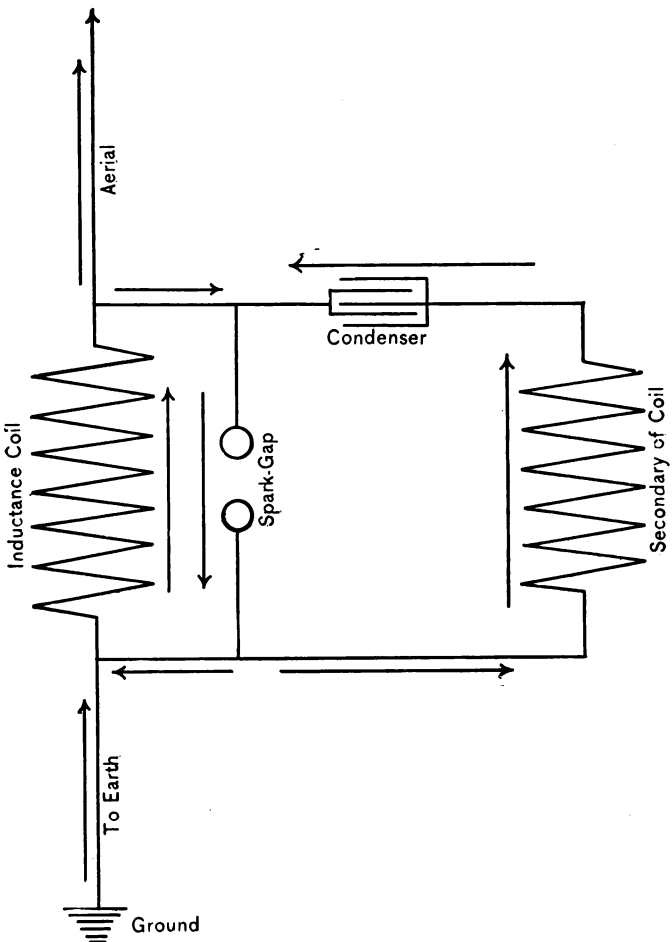

FIG. 92.—Diagram of Action of a Conductive-coupled Sending System.

Digitized by Google

to the diagram that a second closed circuit is formed by the spark-gap in series with the secondary of the induction coil, but it should be understood that the oscillations cannot surge through this closed circuit, for the inductance of the secondary is so excessive for the enormously high frequency oscillations that it acts as a choke-coil, with the result that the greater portion of the energy is confined to the open and closed oscillation circuits. Before the oscillations can be communicated to the aerial and grounded wires their energy must surge through the Leyden-jar battery and the inductance coil. As these are, respectively, adjustable and variable, the closed circuit can be, and indeed it must be, tuned to the period of oscillation best adapted to the aerial-wire system. When tuning is effected the oscillations of the closed circuit will flow through the open circuit in the same period of time, and there will be no opposition currents to waste the energy, but instead the maximum amount will be available for radiation from the aerial.

Action of an Inductive-coupled Sending System.—In loose-coupled systems where a high-frequency and high-potential transformer is used to further increase the potential of the oscillations impressed on the open circuit by the closed circuit, the action is a little different from that just described. The secondary of the induction coil of course performs the same functions as before, charging the Leyden-jar battery until the energy becomes great enough to produce the spark. The high-frequency current surges in the closed system as above stated, but the

Digitized by Google

energy, instead of being directly impressed upon the open or radiating circuit, is transformed into oscillations of higher potential, while its frequency remains constant, the action being very similar to that produced by an

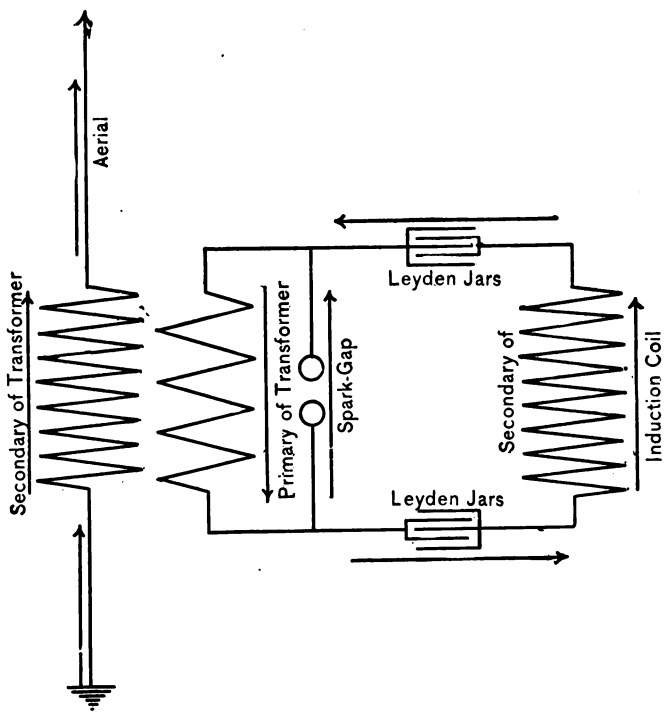

FIG. 93.—Diagram of Action of an Inductive-coupled Sending System.

interrupted or alternating current in its conversion by an induction coil; in other words, the primary coil links the turns of the secondary coil with a rapidly oscillating magnetic flux, which produces in the secondary coil of the transformer, due to its greater number of turns of

Digitized by Google

wire, oscillations of higher potential, and the energy of these is damped out by the aerial wire in the usual way. Fig. 93 indicates the direction of the current during one-half a cycle.

Action of a Receiving System.—When the electric waves that are radiated by the aerial wire of a distant station impinge upon the aerial wire of the receiving station, the energy of which they are built up is converted into electric oscillations, very much in the manner that magnetic lines of force are changed into electric currents when they intersect a wire conductor. These oscillating currents in the resonator or receiving aerial have exactly the same frequency as the oscillations in the radiating aerial that emitted them, provided, of course, that the oscillator and resonator have the same relative values of inductance, capacity and resistance For a diagram of a simple open-circuit resonator see Fig. 2, Chapter I.

Action of a Conductive-coupled Receiving System.—Where the receiving system comprises an open and a closed circuit, as shown in Fig. 94, the electric oscillations set up in the open circuit are impressed directly on the closed circuit, the action being diametrically opposite to that which takes place in the transmitting oscillation system; the advantage of coupling the two circuits together is that in the open circuit, as we have learned, the electric oscillations are damped out in two or three swings; but where these are impressed on the closed circuit they are damped out very slowly and produce a cumulative effect on the coherer or other detector.

Digitized by Google

Action of an Inductive-coupled Receiving System.—Where an oscillation transformer is used to inductively

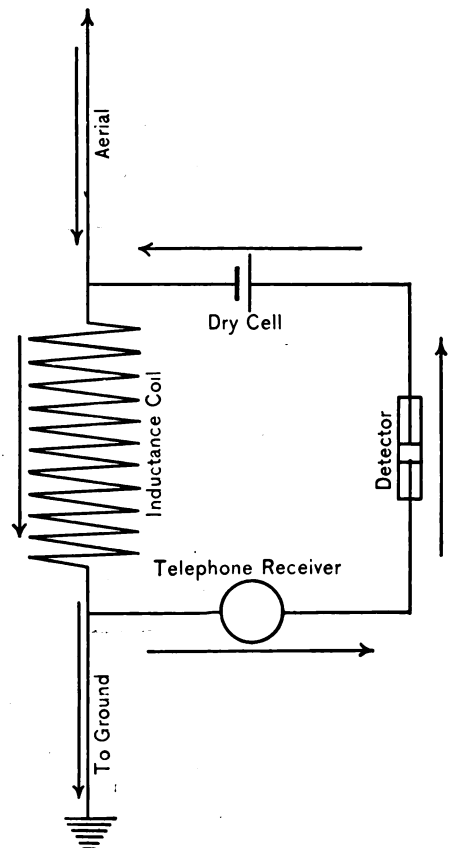

FIG. 94.—Action of a Conductive-coupled Receiving System.

couple the open circuit with the closed circuit, as shown in Fig. 95, the oscillations are transformed by mutual

Digitized by Google

induction from the open to the closed circuit, and there they surge with even greater persistency than in a con-

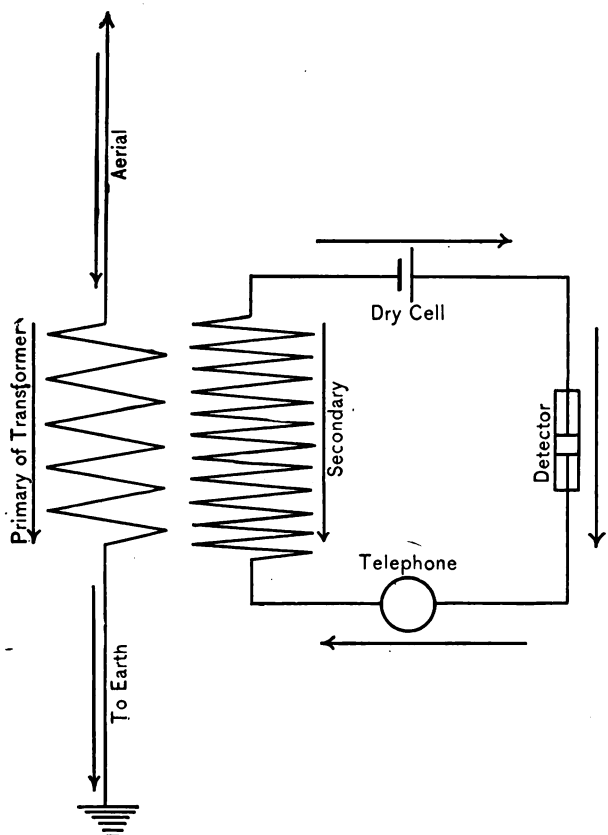

FIG. 95.—Action of Inductive-coupled Receiving System.

ductive-coupled system; but there is a greater loss of energy in transformation, so that one scheme is about as effective as the other.

Digitized by Google

Action of a Coherer.—When an oscillating current of either a plain or compound-circuit receiving system surges through the coherer, as previously described in this work, the filings are drawn together as though they were magnetized, and, following this, the minute sharp edges are welded, forming a practically continuous conductor until the coherer is tapped back. To perform this action of reducing the resistance of the coherer filings is the sole function of the oscillating current in the receiving aerial. The coherer simply acts as a delicate relay, for it permits the utilization of a current of much greater strength than the oscillating current has, and, being a direct current, it is adapted, where the other is not, to operate a polarized relay, when all the current needed can be supplied.

Action of the Polarized Relay.—When a current from a dry cell is allowed to flow through the coherer by the action of the oscillating current, the former passes through the coils of the relay magnet. Since both poles of the electromagnet are of the same polarity when there is no current flowing, the armature carrying the movable contact-point will remain stationary; but when the current flows through the coherer one of the poles of the electromagnet changes to the opposite sign, and the armature is attracted by the one and repelled by the other, throwing it into contact with the stationary point and so closing a second internal circuit.

Action of the Tapper.—In the circuit which is closed by the relay contact-points are the dry battery, tapper, and Morse register. When the relay closes the second circuit

Digitized by Google

a portion of the current from the battery of dry cells flows through the coils of the tapper magnet, causing the armature carrying the hammer to be attracted to its poles when it strikes the coherer; the blow breaking the filings apart, the coherer and relay circuit is broken, which in turn breaks the circuit in which the tapper is placed. As the tapper has a vibrating armature like an electric bell, it may strike the coherer half a dozen times before the circuit is finally broken.

Action of a Morse Register.—The Morse register, being placed in a circuit parallel with the tapper, of course receives its pro rata of the current, and simultaneously the current, flowing through its magnet, releases a spring motor that carries the tape forward, and at the same time a lever fixed to the armature, through which the band of paper slides, carries the latter upward into contact with an inked disk, which prints the message in dots and dashes. The time constant of the vibrating armature of the tapper must be low compared with that of the armature lever; that is, the first must be able to strike three or four strokes while the latter moves up and down once, or else the dots will not properly run together to form a dash when a succession of oscillating currents representing a dash is received.

Action of an Electrolytic Detector.—Detectors of this type, Fig. 52, may be connected directly to the aerial and grounded wires or in coupled systems, as in the case of the coherer. When the current from the dry cell flows through the detector minute bubbles of gas, due to polarization, are

Digitized by Google

formed on the point of the fine platinum wire when the current is practically cut off; now when an electric oscillation surges through the detector it breaks through the insulating film of gas and permits a momentary current from the dry cell to flow through the telephone receiver when the sound of the sending spark is heard.

Action of a Magnetic Detector.—In this detector the moving band of soft-iron wire, Fig. 85, is constantly magnetized by two small horseshoe nagnets; the primary coil through which the band travels is connected to the aerial and grounded wires, and the terminals of the secondary wire to the telephone receiver. Now when there are no oscillatory currents surging through the resonator the magnetic intensity remains unchanged, and no sound is heard in the telephone receiver; but when the oscillations take place these vary the magnetism of the wire band when alternating currents are induced in the secondary coil, and, flowing through the telephone receiver, are rendered audible.

Action of a Crystal Detector.—When electric oscillations pass through a crystal detector, Fig. 50, they are rectified or changed into direct currents and for this reason it is not necessary to use a battery current to make it operative. With certain crystals, however, a battery current seems to increase their sensitiveness.

The crystal detector is current operated; that is, its action depends on the total energy absorbed by it and it can therefore be used for long trains of waves of small amplitude—a valuable feature where sharp tuning is

Digitized by Google

necessary. Different from voltage-operated detectors, as the coherer, the change in the ohmic resistance of a crystal detector is very small, so that only the telephone receiver has proven a satisfactory indicator when used with it.

Another important feature is that there is evidently no change in the sensitiveness of these detectors when operated with different frequencies of oscillations so that the detector gives just as good results with one type of transmitter as with another.

Digitized by Google

CHAPTER IX

ADJUSTING AND OPERATING THE INSTRUMENTS

Notes on Adjusting.—The adjustments required for the proper working of the sending and receiving instruments comprise (*a*) those of the low-voltage circuits of the induction coil, (*b*) those of the high-potential circuits of the oscillator, (*c*) those of the low-voltage circuits of the receptor, and (*d*) those of the high-frequency circuits of the resonator. The simplicity or complexity of the adjustments depends largely on the nature of the system employed. Where simple open-circuit oscillators and resonators are used there are no adjustments to be made, if we except that of the spark-gap, as the values of inductance, capacity, and resistance are fixed; the older forms or systems of wireless telegraphy utilized these definitely fixed radiator and receptor circuits, but the more recent modifications are provided with compound circuits, and these require adjustment in order to obtain the most favorable results. In the older makes of apparatus the coherer, tapper, and Morse register were used for receiving the messages, but this complicated apparatus has been largely superseded by the more simple and rapid auto-

Digitized by Google

detector and telephone receiver, the number of adjustments having in consequence been greatly reduced. The low voltage or internal circuits of the transmitter remain practically the same as in the beginning of the art, but here the adjustments are few and easy to make.

Adjustment of Instruments in the Primary Circuit.— The adjustments of the transmitting apparatus, where the aerial wire and earthed terminal are connected direct to the spark-gap, are confined to the primary circuit. A rheostat is connected in the primary circuit, and enough resistance should be thrown in to prevent excessive sparking at the contacts of the interruptor, or, where a mercury-turbine or electrolytic interruptor is used, the amount of current needed can be roughly estimated by the sparking at the contacts of the key. A volt meter shunted across the circuit, and an ammeter in series with it, are useful instruments to measure the initial energy used, but they are not always to be found in the different stations

(*a*) When the amount of current flowing through the primary circuit seems to be about right the interruptor is adjusted; if it is of the vibrating spring type, the adjusting screw should be turned so that it will start easily and quickly when the key is depressed, closing the circuit, and a partial turn one way or the other will often reduce the sparking between the platinum contact-points to a minimum without appreciably affecting its starting action.

(*b*) Where a mercury turbine interruptor is used the adjustments are limited to increasing its speed of rotation and varying the length of its segment. Where a potential

Digitized by Google

of 110 volts is the initial pressure the shortest segment furnished with the device, which is a quarter of a circle in length, should be used; if the current is taken at 60 or 65 volts, then the longest segment, which has a length of half a circle, is best adapted. The speed of the turbine is important, and as this depends on the motor, see Fig. 70, the latter is regulated by a small rheostat. The speed of the turbine should be run up until a white spark is produced, when it will emit a continuous sound, and the ear soon becomes trained to know that this is the proper kind for good working. The current can now be further increased until the ammeter shows that 8 to 10 amperes are flowing through the primary of the coil.

(*c*) An electrolytic interruptor requires practically only one adjustment, and that is to raise or lower the platinum anode, though the electromotive force may be varied with excellent results; a potential of at least 40 volts is required to operate it properly. Nearly all electrolytic interruptors are provided with a cooling-worm, and the operator should see that there is a stream of water flowing through it; otherwise the electrolyte will become heated, and this diminishes the rate of interruption, and, if permitted to continue, will cause it to stop altogether.

(*d*) The contacts of the Morse key soon become roughened by the heating action of the sparks on breaking contact, and must be looked after; when their opposed surfaces become uneven they should be put into condition with a file. This also applies to the platinum contacts of the vibrating spring interruptor.

Digitized by Google

(*e*) Where an adjustable condenser is shunted around the break of the interruptor a much more satisfactory spark can be obtained across the discharge-gap than with a condenser having a fixed value; a lever is so arranged that any value may be had from zero up to its full capacity, though of course this is obtained by steps.

Adjusting the Spark-gap.—Since, in a simple open-circuit oscillator, the aerial wire and the earthed terminal are fixed to opposite sides of the spark-gap, there is nothing to adjust but the length of the spark. The spark-gap should be cut down when sending messages to about $\frac{1}{20}$ to $\frac{1}{5}$ of the longest sparks the coil is capable of giving; if too long a spark-gap is used, the resistance offered to the released charge is so great that the current may not oscillate, but will simply pass through the system in one direction. But when the spark-length has been cut down the operator must see that the necessary amount of resistance is in the primary circuit; for, should it be worked with an overload, the coil may be injured, due to static strains set up within it.

To Tune a Coupled Transmitter. — The following method of tuning applies to the tuning of either close- or loose-coupled oscillation circuits. The primary circuits are adjusted as described in the preceding paragraphs, and it now becomes necessary to tune the closed circuit to the open circuit. The hot-wire ammeter is provided with several shunts, and the shortest of these should be placed in the instrument, in accordance with the instructions accompanying it; it is then ready to be

Digitized by Google

connected in circuit with the aerial wire, as shown in Fig. 96. The contact-plugs or spring-clips should be placed together on the middle turns of the inductance coil and their positions varied, not relatively, but they should be

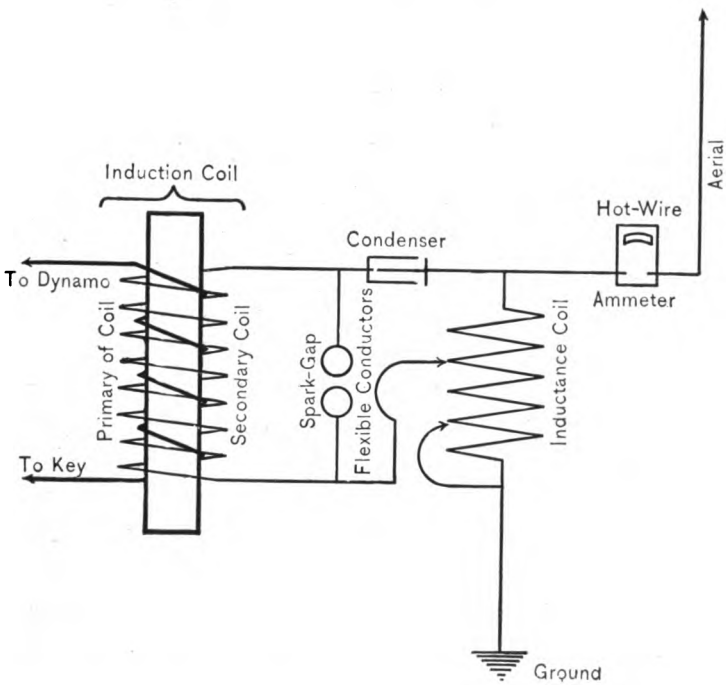

FIG. 96.—Hot-wire Ammeter in Aerial.

moved together until a point is found where the reading of the ammeter is the highest; to ascertain this the primary circuit must be closed by the key for a sufficient length of time to permit the needle of the ammeter to come to rest.

Digitized by Google

Having gotten the best results in this manner, a longer shunt may now be inserted in the ammeter and the upper contact-plug or clip moved gradually away from the lower contact, when a position will soon be reached where the reading of the ammeter will give a still higher value, showing that now the open-circuit aerial-wire system and the closed oscillation-circuit are more or less accurately tuned to the same periods. If the interruptor is of the mercury-turbine or electrolytic type, it may be further adjusted and a greater amount of energy can be used; then the upper plug or clip may again be adjusted until the reading is maximum, when the circuits may be said to be fairly well tuned. As the hot-wire ammeter is not a very accurate instrument, several readings should be taken to determine the value of the current energy of the oscillations surging in the aerial wire, and the mean reading taken as standard.

To Tune the Aerial-wire System to Emit a Given Wave-length.—The best results are obtained in wireless telegraphy when the transmitter and receptor are tuned to the same wave-length; when they are thus tuned so that they will be co-resonant they are said to be *syntonized*. Where only two stations are engaged in communication the receiver can be tuned to the same period of oscillation as the sender, as will be described presently; but when a receptor is to receive messages from two or more transmitters, it then becomes necessary to tune each of the latter to emit waves of a length suitable for the receptor.

It has been previously stated that a plain aerial wire

Digitized by Google

system, that is, one in which there is neither inductance coil nor condenser inserted, will emit a wave approximately four times its length, and therefore where two or more sending stations are to be used in connection with one or more receiving stations the aerial wires of the former should be practically the same length. While it is comparatively easy at shore stations to have the aerial wire of the same length, on board ship the conditions met with are very different; yet, as, for instance, in the Navy and the mercantile marine service, it is essential that all stations, both on ship and shore, should use the same wave-length.

(*a*) This is accomplished in the following manner: First, a wave-length should be selected that is equal to or a little longer than that emitted by the longest of the aerial wires used. A tuning-device, of which one form is shown diagramatically in Fig 97, is called into action. This device comprises an adjustable spark-gap formed of needle-points, a condenser of small capacity, and a portable tuning-coil of the same relative proportions as the tuning-coil used in the receiver, namely, each turn of wire represents a length of one meter. The length of each turn of wire is really only 90 centimeters, but by adding the increased value given by the inductance each turn will increase the length of the wave emitted by the aerial 4 meters; as each tuning-coil has 100 turns of wire, any wave-length from that produced by the plain aerial wire up to 400 meters, when all the inductance is thrown in, may be had at will.

Digitized by Google

In the Navy the ships are equipped with aerials having a length, where possible, of 50 meters, and the wave is of course about four times this length, or 200 meters; the inductance and capacity of this open circuit are equal approximately to those of a closed circuit containing seven 1-gallon Leyden jars and one turn of inductance. To tune

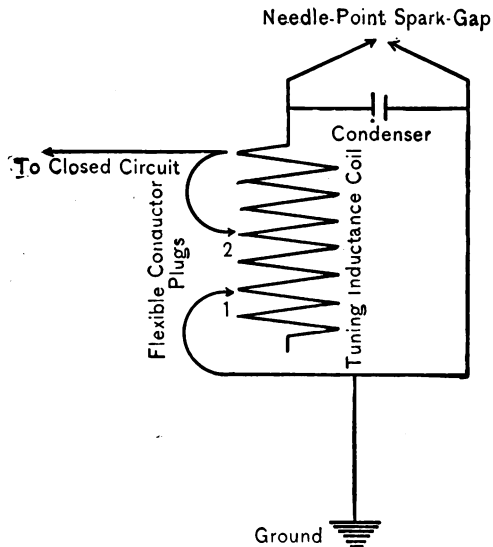

FIG. 97.—Tuning Device.

an aerial that is less than 50 meters in length so that it will emit a wave of 200 meters, the tuning-device shown diagrammatically in Fig. 98, is connected to the closed circuit formed of the Leyden-jar battery, the spark-gap, and the inductance coil, all of which are included in the cross-sectional drawing in the same figure. The sliding contacts 1 and 2 on the coil of the tuning-device are

Digitized by Google

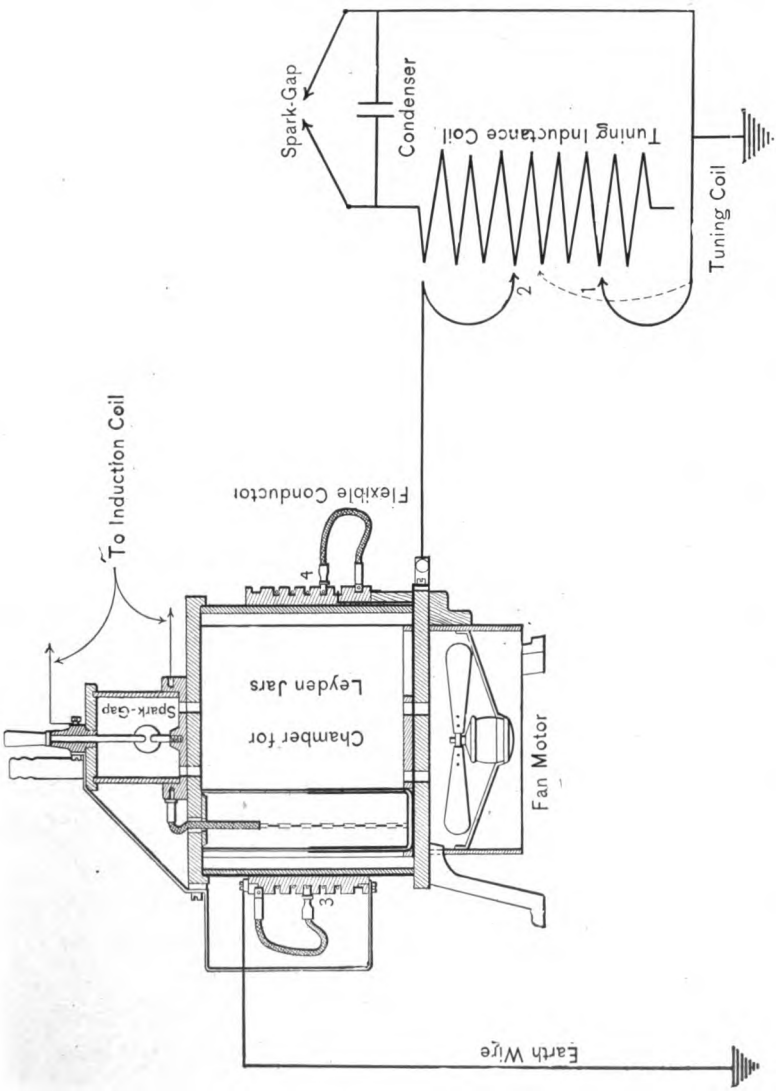

FIG. 98.—Adjusting the Aerial-wire System to Emit a Given Wave length.

Digitized by Google

brought closely together, as shown in the dotted line, and set at a point equal to about one-fourth of the wave-length it is desired to use.

The plugs or clips 3 and 4 of the large sending inductance coil are also brought together on the middle turn; the terminals of the sending spark-gap, on top of the Leyden-jar battery or wherever it may be placed, are now brought very closely together but without making contact, and the aerial wire disconnected. All the resistance in the primary circuit should be thrown in and the induction coil set into operation; the transmitting key is pressed into contact and the resistance gradually cut out until a good spark is produced in the regular spark-gap. The small needle-point spark-gap of the tuning-device is opened to about 2 centimeters, and the plug-contacts 3 and 4 of the sending inductance coil are adjusted until a spark is produced in the needle-point spark-gap; continue to increase the length of this spark-gap and to change the position of the plugs on the sending inductance until the longest spark obtainable between the needle-points is produced. When the position of the plugs 3 and 4 on the sending inductance coil gives the greatest potential between the terminals of the tuning inductance coil, shown by the longest sparks between the needle-points, then the closed circuit of the transmitter is adjusted to the required wave-length.

(*b*) This done, it is now necessary to adjust the aerial wire to the closed circuit; the tuning-coil device may now be disconnected from the closed circuit and the aerial

Digitized by Google

wire connected to the end of the sending inductance coil, as shown in the wiring diagrams for close coupled oscillators, see Fig. 73. The hot-wire ammeter is now connected in series with the aerial wire, as described in this chapter under the caption *To Tune a Compound-circuit Transmitter*, and shown in Fig 96. The terminals of the spark-gap are drawn apart until a gap of 0.5 centimeter in length is formed, and, after switching on the current, the resistance offered by the rheostat should be cut out until a heavy discharge is produced. Closing the primary circuit by means of the key, the plug 4 is moved away from 3 toward the bottom of the inductance coil, until the hot-wire ammeter shows the highest reading. When this point is obtained the aerial wire will then be in tune with the closed circuit, and the wave emitted by the aerial wire will have the length previously decided upon. The necessity of determining with precision the positions of the plugs or clips on the sending inductance coil cannot be too strongly impressed upon the operator, for on the nicety with which this is done depend the harmonious relations between the open and closed oscillation circuits, and once that these adjustments have been made, the operator should never change them unless a new wave-length has been chosen, when the tuning process must be done all over again.

To Tune a Coherer Receptor.—As we have seen above, the transmitter is syntonized to the receptor, instead of the latter to the former; for this reason all that is needed by way of adjustment is to tune the closed to

Digitized by Google

the open circuit of the resonator or receiving circuits. In the tuning device there is a small condenser which has a capacity about equal to that of an ordinary coherer, although these vary to some extent. If now the sending aerial is syntonized accurately to the receiving aerial-wire system, then the latter will require little adjustment other than to slide the contact-points 1 and 2 of the receptor tuning-coil (Fig 27) to a point indicating the wave-length selected on the graduated scale. As contact 2 is immediately above 1, the inductance value of the few turns from 1 to 2 is the same, or should be, as that portion of the earthed terminal of the sending circuit.

The varying capacities of different coherers render it almost impossible to syntonize the transmitter and receptor with absolute accuracy, and the best way to test out their co-resonant qualities is by the empirical method of experiment. This consists of having some sending station using the requisite wave-length to assist in trying it out. To make the test the sending station should be located about a quarter of its normal signalling distance away from the receiving-station, or, say, 30 miles at the shortest, or 40 miles at the longest range. A certain test letter is chosen, for instance, the letter S, represented by three dots; the operator at the sending-station sends this letter over and over with a few minutes intervening between each transmission, so that the receiving operator will have ample opportunity to adjust the tuning coil; after the test letter has been sent several times the operator at the transmitting station should cut down the initial

Digitized by Google

current until the intensity of the spark is only half of that ordinarily used in transmission; by careful tuning the operator at the receiving station will secure a nice degree of resonance, and when the sending operator cuts out the resistance in the primary circuit the messages will come in loud and clear.

Adjustment of the Receiving Instruments.—The oscillator and the resonator circuits of the sending and receiving stations having been properly tuned and syntonized, the receiving instruments must be adjusted. If these include a coherer, relay, tapper, and Morse register, considerable care must be exercised to keep them all in working order, but where an auto-detector, like that of the electrolytic or magnetic type, is used, these are greatly simplified.

(*a*) *The Coherer.*—This is adjusted before it leaves the hands of the makers, but if the conductor-plugs are bevelled, forming a V-shaped pocket for the filings, the operator is enabled to increase or decrease its sensitiveness within certain limitations, these changes being made by merely turning the coherer partially around on its longitudinal axis.

(*b*) *The Relay.*—The principal adjustment of the internal circuit containing the coherer, dry cell, and relay is made by means of a large milled screw projecting from the case of the relay. By turning this screw the position of the armature between the poles of the magnet is varied, and in this way a very sensitive adjustment can be had and one in which the feeblest current

Digitized by Google

flowing through the coherer will affect. The relay should be tested frequently, once a day at least, and this may be done in one of two ways; namely, (1) by placing it in series with a resistance of 20,000 to 40,000 ohms, or so, with a single dry cell, when, if it is in good working order, it should readily respond; and (2) by grasping the binding-posts of the relay magnet-coils and permitting the current to flow through the body, when, if it is adjusted to its maximum sensitiveness, it should likewise operate. Its sensitiveness must, however, be just below that point at which its armature vibrates or chatters when the circuit is broken.

(*c*) *The Tapper.*—This must be adjusted so that it taps the coherer a sharp quick blow. Some tappers have three adjusting-screws: (1) the screw moving the coherer to and from the hammer; (2) the screw for moving the poles of the magnet to and from the armature; and (3) the screw carrying the stationary point that makes and breaks the circuit formed between it and a spring attached to the armature. The tapper will not need to be adjusted often, and a little practical experience will make this easy.

(*d*) *The Morse Register.* — The adjustments of the register are the most numerous and complicated, in virtue of the fact that it is actuated electrically and operated mechanically. Like all other parts of the sending and receiving apparatus, there are slight differences in the design of registers, but the usual type is provided with these adjustments: (1) a screw on the upper end of the

Digitized by Google

lever to which the armature is attached; this is to limit the distance to which the armature can be drawn away from the poles of the magnet; (2) a screw at the opposite end of the same lever to limit the approach of the armature to the poles of the magnet; this screw, when the armature is attracted by the magnet, strikes a pin projecting outside the brass case, which in turn releases the mechanism of the spring motor which feeds the tape; (3) a screw for adjusting the tension of the spring that controls the upward pull of the armature, and this also regulates the pressure with which the paper tape is brought to bear against the revolving inked disk; (4) a small weight that slides on a rod for governing the speed of the motor through an escapement, so that the normal speed with which the paper travels may be varied; (5) a screw for adjusting the pressure exerted on the paper fed by a toothed wheel, through a smooth wheel above it; and (6) a screw for adjusting the length of the paper that shall run out after the electrical mechanism has ceased to act.

Should the register fail in any of its operations, some one of the following troubles may account for it: (1) The current of the dry battery may be two weak to pull down the armature, and this may be due to the latter having too much play, hence the screw in the upper end of the lever should be adjusted so that the armature has a very limited movement. (2) If the armature strikes after it is drawn down by the action of the magnet, then the screw in the lower end of the armature lever requires

Digitized by Google

adjusting, so that the latter just clears the surfaces of the poles of the magnet. (3) Not only may the battery be weak or the armature too far removed from the magnet, but the spiral spring whose tension controls the free movement of the armature may be too great and should be slackened; these comprise the adjustments for the electrical portion of the register. (4) If the escapement and small weight that governs its movements will not act, it is due probably to the sticking of the releasing mechanism. The cover of the register case must be removed and an examination of the former will no doubt reveal the cause; it may be due to dust having accumulated therein, or the adjusting-screw on the lower end of the armature lever which strikes it may be in or out too far. (5) If the armature, releasing mechanism, and motor work all right, but the tape does not travel as it should, then look to the spring controlling the pressure of the feeding wheels: this should not be too weak nor yet again too strong. (6) The screw for adjusting the margin of the paper may be screwed in or out so far as to cause it to stick. The author has seen beginners work over these adjustments without success, only to find that a screw had been turned to the right or left so far that it seemed to him who made the attempt that no amount of adjusting could get it back into its normal position. There is a happy middle road in making adjustments, and the operator must see that he keeps to it. Then, even if the adjustments have been correctly made, there is the possibility that too much friction is being exerted on some

Digitized by Google

of the spindles, and when every other means has failed the register must be taken apart, cleaned, oiled, and set up anew.

Testing the Receptor.—Finally, the coherer, relay, tapper, and battery must be adjusted so that they will work in unison, and if the preceding instructions are carried out, a little patience and practice, both of which are absolutely essential to the making of a capable operator, will result in an efficiently acting apparatus. When each of the instruments has been adjusted the coherer and relay circuit should be closed and then the devices tested out collectively. This may be done by holding the buzzer or testing-box a foot or two away from the coherer and pressing the button; if the relay is properly adjusted, the waves sent out by the buzzer will act upon the coherer, and the other appliances will respond. If the instruments do not respond, the relay should be readjusted until these do.

Adjustment of an Electrolytic Detector Receptor.—Where an electrolytic detector and a telephone receiver are employed as a receptor all the complicated adjustments of the coherer and Morse register are wiped out. A variable resistance is inserted in the internal circuit containing the detector and receiver, and half of the resistance should be thrown into the circuit; then the fine platinum wire point which dips in the electrolyte is adjusted by means of a fine screw, until the oscillations set up in the aerial by the incoming waves produces the loudest sound in the telephone receiver. Then by vary-

Digitized by Google

ing the resistance in the circuit a point will soon be reached where the intensity of the sounds are maximum, when it is ready to receive.

Adjustment of a Magnetic Detector Receptor.—This is by far the simplest receptor as far as adjustment is concerned, and fortunate is the operator whose lot it is to be in charge of a station where it is used. After the magnets are placed and the speed of the flexible band of iron wire is regulated it is in working order.

Adjustment of a Crystal Detector Receptor.—For a detector of iron sulphide the bright crystaline variety only is sensitive. In combination with a phosphor-bronze point, iron sulphide may be worked under considerable pressure and it makes therefore a convenient and practical crystal. In adjusting an iron sulphide detector, it must be borne in mind that all points in the crystal are not sensitive and consequently the bronze point must be moved around until a sensitive spot is found. Do not attempt to polish the crystal as this tends to destroy its sensitiveness.

Where the detector consists of two crystals in contact, such as chalcopyrite and zincite, the loudness of the signals can be increased by using a dry cell and potentiometer in connection with the detector. In this case the positive terminal of the dry cell is connected with the chalcopyrite and the current of the cell should be cut down to about $\frac{2}{10}$ volt. Where a crystal has long been in use and subjected to large battery currents its working qualities are likely to become impaired; to restore a crystal to its normal sensitivity, clean it with carbon disulphide.

Digitized by Google

To adjust a crystal detector receptor, place the head telephones in position and bring the opposing crystals or crystal and metal points together with as slight a pressure as possible. Now regulate the flow of current from the dry cell with the potentiometer and finally bring up the signals to their maximum intensity by means of the tuning-coil.

Learning the Alphabetic Codes.—As in ordinary telegraphy, wireless messages are sent and received in alphabetic code, that is, in dots and dashes. There are three different dot-and-dash codes used, namely, the Morse, the Continental, and the Navy Signal. The two latter codes are used in preference to the Morse, since the latter has spaces as well as dots and dashes to represent the letters. To learn to send and receive in code the beginner should procure a telegraph key and connect it in series with a buzzer and one or two dry cells, as shown in Fig. 99. A high speed is not necessary in sending wireless messages, but accuracy is of the greatest importance. To insure a readable message care must be taken to make the dots and dashes of even length, equally spaced, and clear-cut; the key must be firmly pressed down, held in contact the required length of time and then released. A speed of twelve words per minute is rapid enough for a system using a coherer and a Morse register, and when this can be accomplished without effort the manual part of the beginner's work is done, and then he can readily get up to a speed of sending thirty or thirty-five words per minute, which is required in systems using auto-

Digitized by Google

detectors and telephone receivers. Practice is the great teacher, and practice alone will insure the proper style of sending.

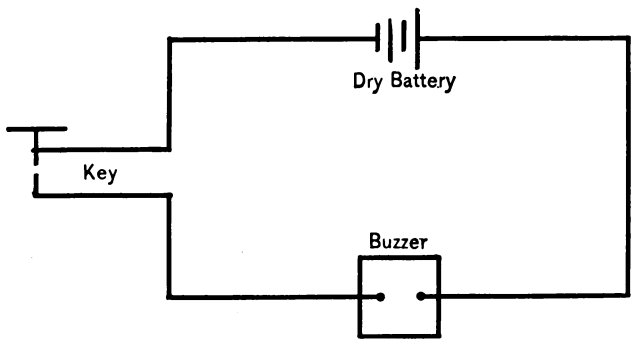

FIG. 99.—Learner's Set.

Wireless Telegraph Codes.—The three different telegraphic codes are given in Figs. 100, 101 and 102, but it is best for the beginner to learn to send in one of these first—preferably the Continental, because it is the most widely used—before attempting the others.

Digitized by Google

CHAPTER X

DIFFERENT MAKES OF EQUIPMENT

Various Systems.—After the first practical system of wireless telegraphy was put into operation in 1896 by Marconi, inventors and scientists in almost every civilized country became imbued with the spirit of the new work and bended their efforts toward improving the apparatus so that the distance of transmission could be extended, that greater accuracy in working could be effected, that the speed of reception could be increased, and finally that a means for obtaining selectivity might be found. These efforts led to many different designs of equipments, though all used the same fundamental principles as the one originally devised; hence the number of different so-called systems.

The principal improvements that have been made during the past decade are those relating to the use of coupled open and closed oscillation circuits, and the employment of auto-detectors in combination with telephone receivers instead of the more complicated coherer and Morse register receptors. The systems that concern the operator are those now in use in the United States,

Digitized by Google

and at present these are the Marconi and the Telefunken. In England there are two systems in extensive use, namely, the Marconi and the Lodge-Muirhead; in France, the Branly-Popp, the Rochefort, and the

A •–	B –•••	C –•–•	D –••	E •	F ••–•	G ––•
H ••••	I ••	J •–––	K –•–	L –––	M ––	N –•
O –––	P •––•	Q ––•–	R •–•	S •••	T –	U ••–
V •••–	W •––	X –••–	Y –•––	Z ––••	& •–•••	
1 •––––•	2 ••–––•	3 •••––	4 ••••–	PERIOD •–•–•–	INTERROGATION ••––••	
5 •••••	6 –••••	7 ––••••	8 –––••••	COMMA ––••––	EXCLAMATION –•–•––	
9 ––––•	0 –––––			COLON –––•••	SEMICOLON –•–•–•	

FIG. 100.—Morse Alphabetic Code.

Tissot; in Russia, the Popoff; in Spain, the Cervera-Baveria; while each of the countries cited has a number of lesser known systems; the details of these are not described, for the reason that the average operator in this country would probably never have occasion

Digitized by Google

to work them, and even if he should, a knowledge of the various arrangements herein described would enable him to adjust and operate them without a great deal of trouble. The origin and rise of the system he is using makes not only interesting reading, but the operator

A ·–	B –···	C –·–·	D –··	E ·	F ··–·	G ––·
H ····	I ··	J ·–––	K –·–	L ·–··	M ––	N –·
O –––	P ·––·	Q ––·–	R ·–·	S ···	T –	U ··–
V ···–	W ·––	X –··–	Y –·––	Z ––··		
ERROR ···––···		UNDERSTAND ··–·–		1 ·–––	2 ··–––	3 ···––
4 ····–	5 ·····	6 –····	7 ––···	8 –––··	9 ––––·	0 –––––

FIG. 101.—Navy Wireless Telegraph Code.

should be generally informed concerning it, and a short description embodying the main points of each will be found under the following captions.

The Marconi System.—Wireless telegraphy is not as old as some of the works giving an historical retrospect of the art would tend to have us believe, neither did it come as a spectacular surprise, as is sometimes stated.

Digitized by Google

As a matter of fact it rests upon a knowledge that dates back just twenty-four years from the present writing. Its evolution came about in this manner: In 1888 Heinrich Hertz, a professor in Bonn University, Germany, concluded from a series of experiments he had made that the electric oscillations set up in an open circuit by means of a disruptive discharge radiated their energy through space not as static induction or magnetic lines of force, but as electric waves that travelled at the speed of light. These classic experiments created a profound impression in scientific circles, and were being repeated by professors of physics in different European colleges for the benefit of interested students. It was thus that William Marconi witnessed the production of Hertzian waves in the lecture-room of the Bologna University, Italy, presumably some time in 1894. The young man—he was then only twenty years old—conceived the idea of employing the waves for signalling without wires, and his first attempts in this direction were made shortly thereafter, or in 1895. Having been successful in these primal attempts, he went to England in May, and in June, 1896, he applied for a patent.

The first experiments the young inventor made after arriving in London were for the authorities of the British Post-office, when he telegraphed without the aid of wires with the new devices between the General Post-office and the Thames Embankment, a distance of 300 feet. Demonstrations on a larger scale were now in order, and these were conducted for the benefit of the War Office and the

Digitized by Google

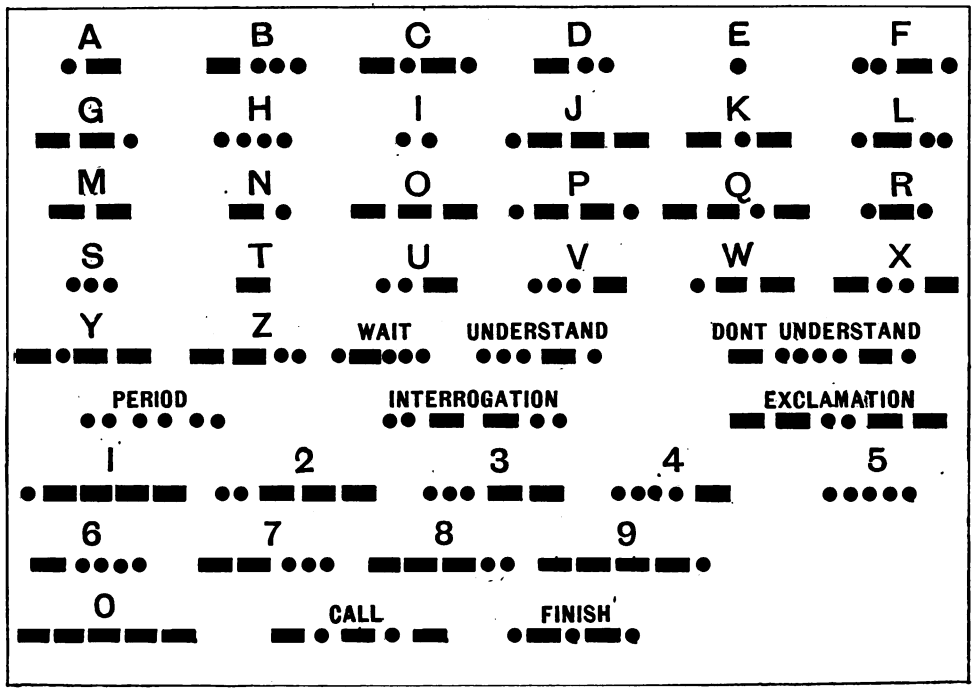

FIG. 102.—Continental Wireless Telegraph Code.

A.—
E.
I..
O---
U ..—

Digitized by Google

Admiralty, the place selected being over Salisbury Plain, across a distance of about two miles. The aerial-wire system was not used in these primitive tests, but the waves were reflected by large parabolic mirrors. The result of the tests were satisfactory, but it was not until the following year that the mirrors were dispensed with and the aerial wires and earthed terminals were substituted in their stead when messages were transmitted between Lavernock and Flat Holm, a distance of about three miles, with aeriel wires at the transmitting and receiving ends approximating 150 feet in height. This was the real beginning of the wireless telegraph in its commercial form. In the same year the distance was increased to eight miles, when messages were transmitted between Lavernock and Brean Down, the aeriels being sustained in the air by means of kites.

It was during these latter trials that Dr. Adolph Slaby of Germany was present, an event that was to have an important bearing on the wireless situation a few years later, for on returning to Germany he immediately set to work and evolved a 'new system,' as we shall see presently. From the results achieved on this memorable occasion the Marconi system could no longer be considered an experiment but a commercial fact. The inventor next visited his native land, and at Spezia, Italy, where a shore station was established and two Italian battle-ships had been placed at his disposal, he proved conclusively that his system was effective over a distance of twelve miles.

Digitized by Google

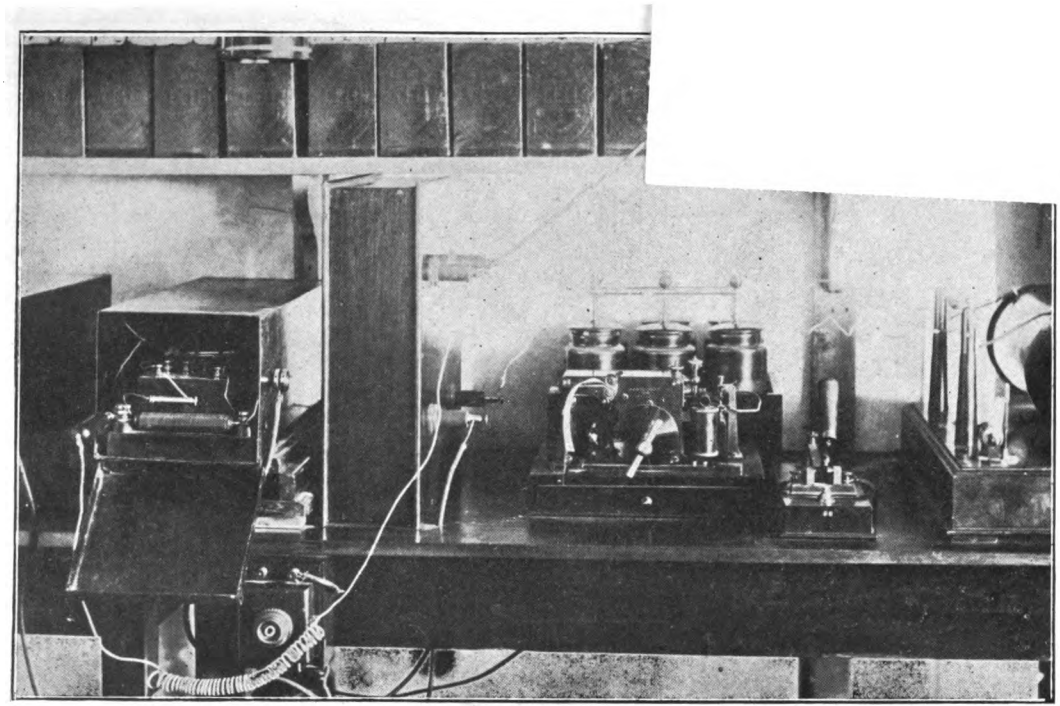

FIG. 103.—Interior of a Marconi Station.

Digitized by Google

Digitized by Google

It was at this important period of development that the Wireless Telegraph and Signal Company, Limited, was formed in London and incorporated in July 1897, with a capital of £100,000; later the capital was increased to £300,000 and the name changed to Marconi's Wireless Telegraphy Company, Limited. The new company erected two stations 14 miles apart, one at Bournemouth and the other at Alum Bay, Isle of Wight, and here a long series of tests were made during all weathers and seasons of the year. It was while these trials were in progress that the distance was increased to 18 miles, when messages were exchanged with an outgoing steamer. Lloyd's Corporation, in May 1898, now became interested in the new method of transmission and had equipments installed at Ballycastle and Rathlin Island in the north of Ireland. The system was next used to report the Kingston Regatta for the *Daily Express* of Dublin, and more than 700 messages were sent between the ship that carried the apparatus and the shore station; then, a month later, the apparatus was used for the benefit and behoof of royalty; it was installed in the royal residence at Osborne and on the royal yacht *Osborne*, where the Prince of Wales, the late King Edward, was on board suffering from a serious accident, and here again communication was successfully maintained.

To demonstrate the value of the new telegraphy more thoroughly than it had yet been, the Marconi Company, in December 1898, installed instruments at the South Foreland Lighthouse and the East Goodwin Lightship,

Digitized by Google

which lay to some 12 miles away. Its usefulness was conclusively proven when a steamer that had stranded on the Goodwin Shoals was saved a loss of over £50,000 due to a single short wireless message. This was only one of the numerous incidents where it served to save not only property, but lives as well.

The achievement that astounded the world came shortly afterward, taking place on March 27, 1899, when Marconi successfully communicated between Dover on the British side of the English Channel and Wimereaux on the French side, a distance of 30 miles. The first application of wireless telegraphy to the Navy was made during the British Naval Manœuvres in 1899. Three cruisers were equipped with the necessary apparatus, and a record distance of 85 miles was covered, when one of the ships received her orders from the flagship of the fleet at that distance. Immediately after followed the introduction of wireless telegraphy in America, when Marconi superintended the reporting of the International Yacht Races at New York, where in less than five hours more than four thousand words were despatched between the ship carrying the apparatus and the shore station, from whence the messages were transmitted over line wires to the *New York Herald*.

Notwithstanding the continued success of the system, it was 1901 before any serious effort was put forth to establish it commercially, and it was then decided by the Marconi Company not to sell the instruments outright, but to lease them. Stations were set up along the

Digitized by Google

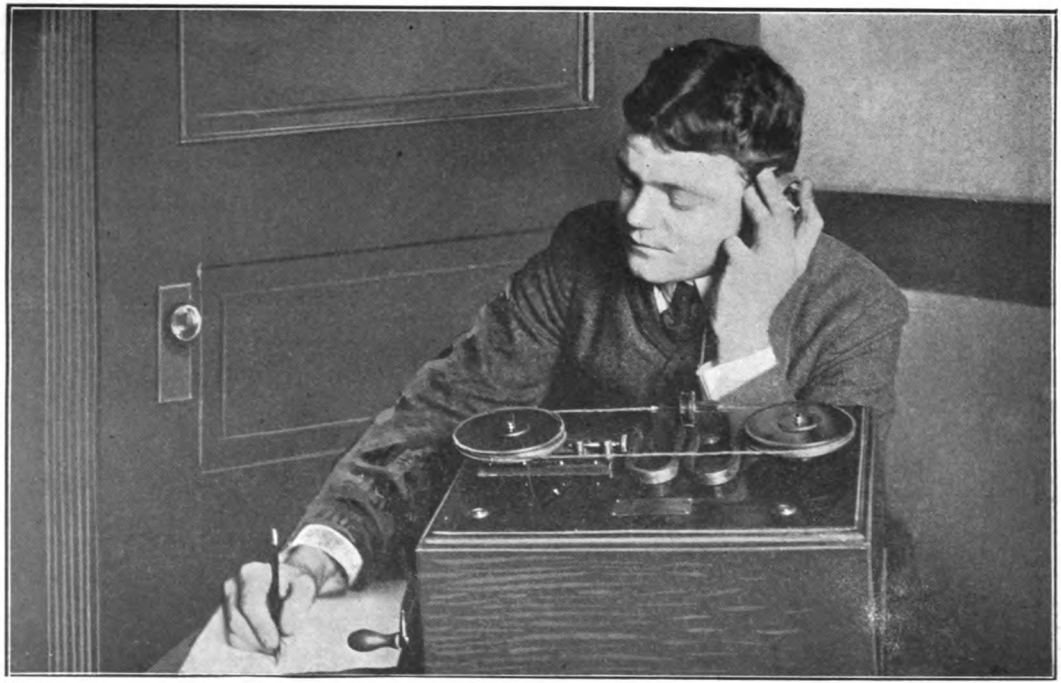

FIG. 104.—Marconi Magnetic Detector Receptor.

Digitized by Google

Digitized by Google

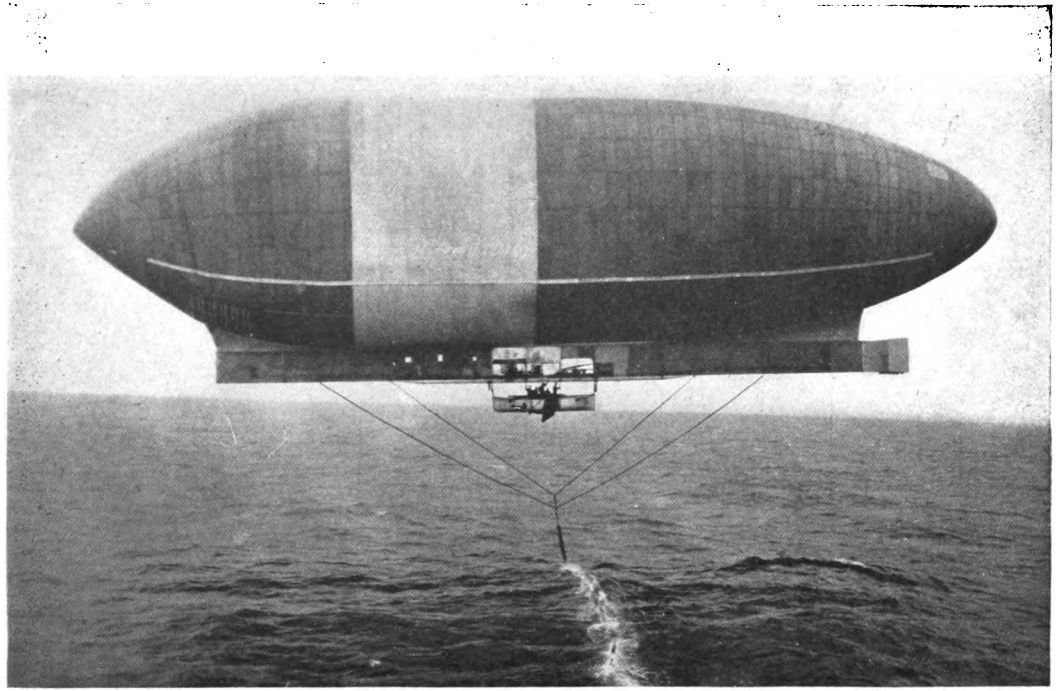

FIG. 105.—Wellman's Airship *America*, in which He Attempted to Cross the Atlantic Ocean. Equipped with Marconi Apparatus.

Digitized by Google

Digitized by Google

Atlantic seaboard both in America and in England, and these formed a comprehensive system of shore stations commanding the most important shipping routes. Through a deal with Lloyd's the Marconi Company secured a contract in which the former are bound not to use any other system for a period of fourteen years, and not to communicate with ships equipped with any other apparatus than the Marconi. Thus an agreement was reached that has effectually prevented any other company from competing in the wireless transmission of messages between ships and shore stations of the trans-Atlantic fleet.

At the present time the ordinary ship and shore stations of the Marconi Company employ induction coils giving a spark of 10 or 12 inches; these are fitted with vibrating-spring interruptors operated by the core of the coil, and a key with large contact-points having a condenser shunted around them. The oscillation system of the transmitter has long since been changed from a simple open circuit to a compound loose-coupled circuit, though occasionally a close-coupled system is used. The inductance coil and high-potential transformer are mounted distinct from the Leyden-jar battery, which is made up of a dozen ½-gallon jars. Both the old and the new style receptors are installed in each station, that is, the coherer and Morse-register receptor and the magnetic detector and telephone receiver apparatus, either of which may be used as desired. In either case the aerial wire is connected to the detectors through a closed circuit by a high-frequency transformer or jigger. An adjustable induct-

Digitized by Google

ance coil and variable condenser having sliding contacts permits the receiver to be tuned. The coherer and Morse register receptor, though installed, is seldom used now, for the magnetic detector receptor, owing to its extreme simplicity, its accuracy, and its speed, has virtually replaced the other and more complicated one.

The Telefunken System.—In the preceding historical retrospect it was mentioned that certain experiments in the very beginning of Marconi's success were witnessed by Dr. Adolph Slaby, a professor at that time in the Technical High School in Berlin. Mr. Fahie, in his admirable work *A History of Wireless Telegraphy*, gives some valuable points bearing on the origin of what is now known as the Telefunken system. He says that on Slaby's return to Germany after witnessing Marconi's experiments in England, the former, in September, 1897, engaged in some very instructive experiments in the vicinity of Potsdam, first between the Matrosenstation and the church at Sacrow, 1.6 kilometers, and then between the former place and the castle at Pfaueninsel, 3.1 kilometers. Other experiments followed at which the Emperor of Germany was present and who, being impressed with what he had seen, put a number of sailors and the large royal gardens at Potsdam at his disposal. The experiments which followed took place at the Naval Station, where the receiver was located, and Peacock Island, where the transmitter was set up. Continuing his researches, he proceeded early in October to make some tests over an open stretch of country free from all inter-

Digitized by Google

Digitized by Google

Digitized by Google

vening obstacles, between Rangsdorp (sending station) and Schönerberg (receiving station), a distance of 21 kilometers; the aerials used were made of double telephone wires, and these were raised by captive balloons to a height of 300 meters. It is reported that under these conditions the communications were always clear and accurate.

Dr. Slaby now colloborated with Count Georg Arco, and in the next two years they had built up a system using a close-coupled oscillator and resonator which they described shortly after Marconi made known his compound system, or, to be more exact, in 1900. Their apparatus took on a definite form, in which the inductance coil was wound around the case containing the Leyden jars, and a mercury-turbine interruptor was substituted for the vibrating-spring interruptor. This system was adopted by the German Navy, and was exploited by the Allgemeine Electricitäts-Gesellschaft (General Electric Company) of Berlin.

About this time Prof. Ferdinand Braun of the University of Strassburg, Germany, brought out a tuned system in which the open and closed circuits were loosely coupled through the medium of a high-potential transformer, and this gave rise to another system; Prof. Braun's arrangement was taken over by the Siemens and Halske Company of Berlin, and equipments were installed in many places throughout Germany.

The patents of the Slaby-Arco people and the Braun interests seemed to conflict, and in 1903 the feeling became

Digitized by Google

so intense that a test of the merits of each faction was aired in the German courts. After this unprofitable procedure it was deemed advisable to amalgamate the companies, and so the Slaby-Arco and the Braun-Siemens and Halske systems were taken over by the Gesellschaft für Drahtlose Telegraphie (Wireless Telegraph Company) of Berlin, and the equipment designated by a name that Dr. Slaby had always favored, that is, "spark-telegraphy," or, as it is called in German, the Telefunken system. This make of apparatus is sold outright, and the Bureau of Equipment of the United States Navy has purchased a large number of sets. The instruments this company are sending out are beautifully finished, but are more complicated than those of any of the other systems now in use in the United States, for the reason, as a reference to the wiring diagrams will show, that the transmitter is furnished with a mercury-turbine interruptor, a motor for its operation, and a magnetic blowout for the key, while the receiver still retains the earliest form, having the coherer, relay, tapper, and the Morse register. The latter arrangement, slow as it is in operation, is preferred by some to a receptor using an auto-detector and telephone receiver, for the former records the messages on a tape and therefore leaves no possibility for error on the part of the receiving operator.

The Signal Corps, U. S. A., Portable System.—This set has been developed chiefly through the efforts of Major George O. Squire, and Major Charles M. Saltzman of the Signal Corps, U. S. A. The source of energy

Digitized by Google

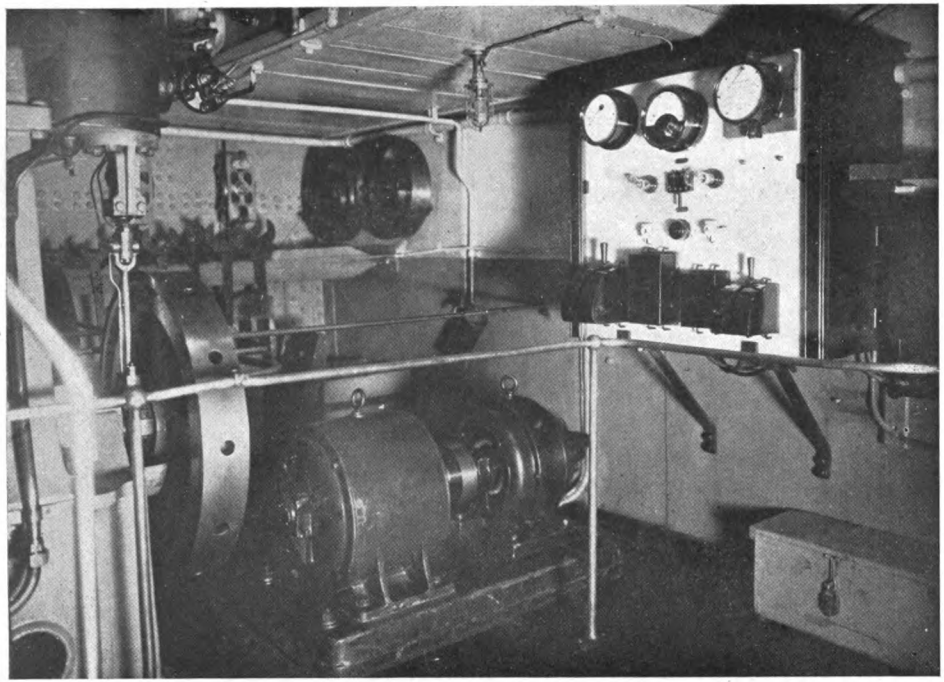

FIG. 106.—Interior of a Telefunken Ship Station. The Generator Room.

Digitized by Google

Digitized by Google

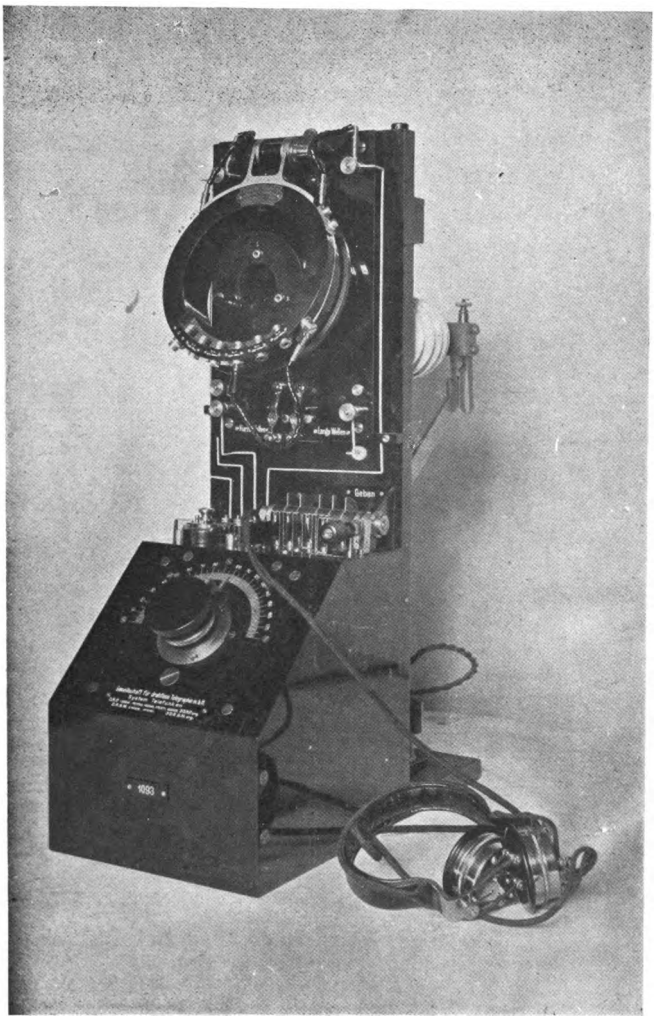

FIG. 107.—Telefunken Auto-detector Receptor for all Wave Lengths.

Digitized by Google

Digitized by Google

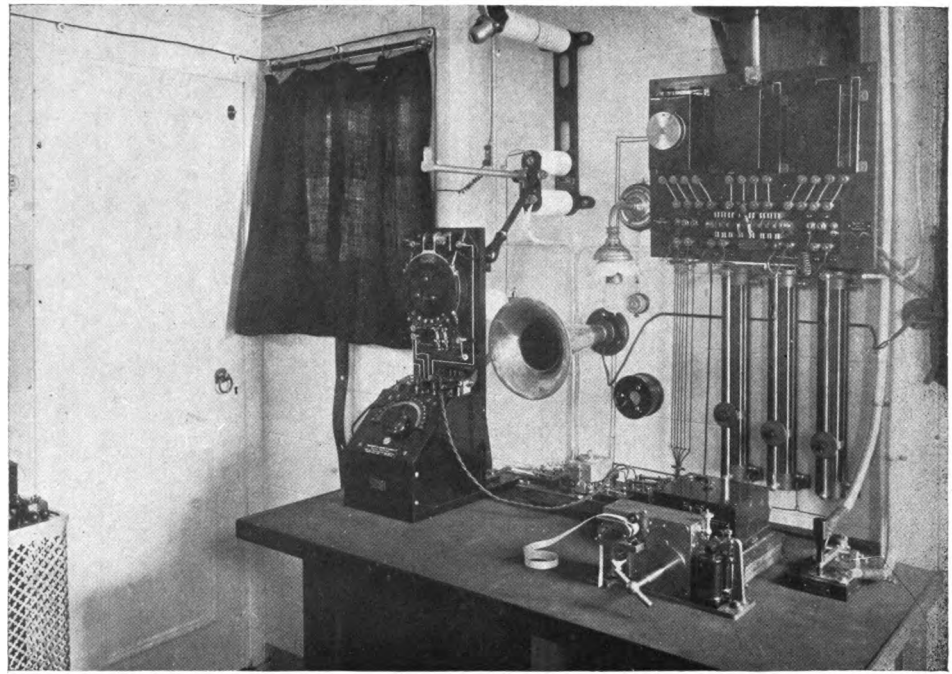

FIG. 107A.—Interior of a Telefunken Ship Station. Coherer and Morse Register Receptor.

Digitized by Google

Digitized by Google

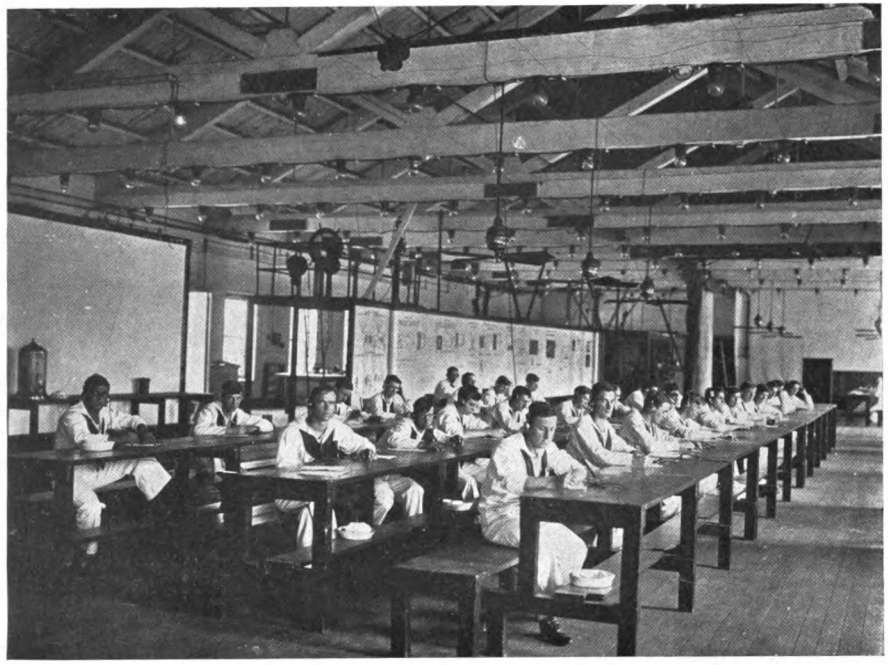

FIG. 108.—Wireless Class in the New York Navy Yard School.

Digitized by Google

Digitized by Google

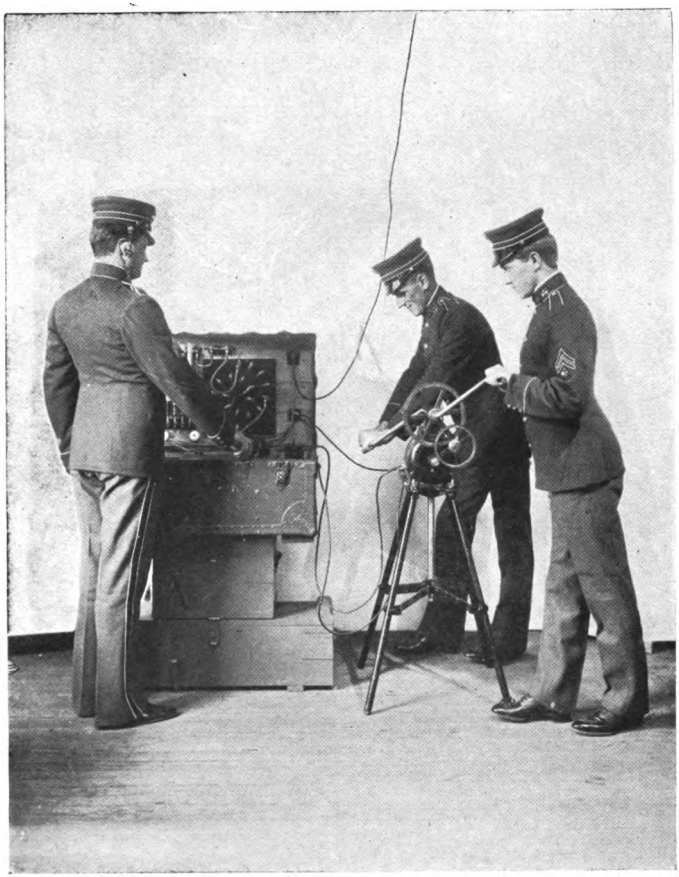

FIG. 109.—U. S. Army Portable Wireless Set.

Digitized by Google

Digitized by Google

consists of a small direct shunt-wound generator geared to oppositely disposed cranks all of which are mounted on a knock-down tripod as shown in Fig. 109. The men can easily drive this dynamo at a speed of 1450 revolutions per minute when it will develop 6 amperes

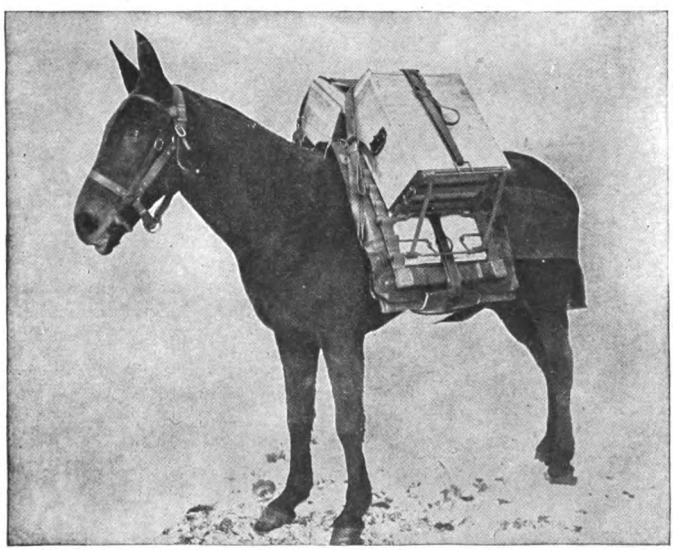

FIG. 110.—U. S. Army Portable Set Packed for Transportation.

at 30 volts. The generator complete weighs 86 pounds. If desired a storage battery weighing 100 pounds may be used in place of the hand generator.

The sending apparatus includes the generating unit just described; an induction coil with interruptor; a primary condenser; a sending key; a tuning-coil; spark-gap; control switch, and the condensers for the secondary

Digitized by Google

circuit. The receptor includes a tuning coil; a crystal detector; receiving condenser; pair of head telephone receivers; two small dry cells; potentiometer; control switch and battery switch. The total weight of the boxes containing the transmitting and the receiving apparatus is 155 pounds.

The apparatus is so designed that it can be packed in two chests, Fig. 110, the weight being evenly distributed on the sides of a mule. The total weight of the outfit is 440 pounds, the jointed hollow wooden mast, previously described in Chapter V, weighing 155 pounds. The set has a range of about 25 miles over level country under favorable atmospheric conditions while the distance it will cover over mountainous country is a little more than half the above figures.

A field staff of six men formed of two or three non-commissioned officers and the others privates, are required to set up the apparatus and to operate it. With trained men the station may be set up in less than half an hour. These portable sets have been assembled by the Signal Corps in Washington, the individual parts being purchased from various companies.

The United System.—This system is a composite one and has been built up by a number of designers. It is controlled by the United Wireless Telegraph Company of New York City. This company was formed in 1907 for the purpose of merging the Marconi and the De Forest Wireless Telegraph Companies. In this it was not successful, though it did acquire the rights of the latter

Digitized by Google

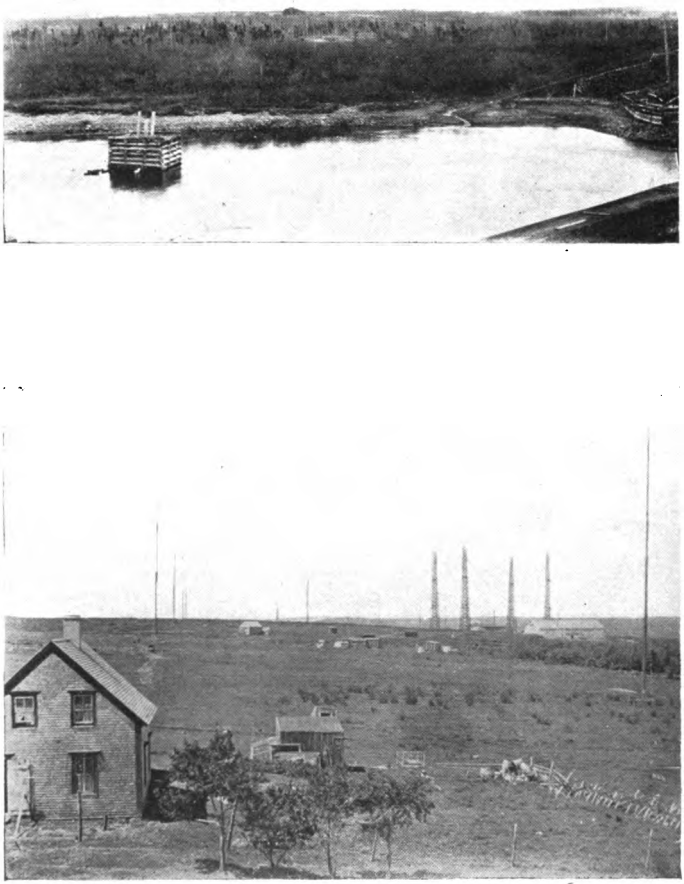

FIG. 111.—Marconi Transatlantic Cableless Station at Glace Bay.

Digitized by Google

Digitized by Google

company and equipped many coastwise vessels and operated a number of stations along the Atlantic and Pacific seaboards and on the great lakes. This company was one of the first, if not the first, to use a crystal rectifying detector.[1]

[1] Since the above was written the Marconi Company has acquired the United Wireless Telegraph Company.

Digitized by Google

CHAPTER XI

SUGGESTIONS TO OPERATORS

General Information.—The Marconi system is operated in conjunction with the Western Union Telegraph Companies in the United States, with the Postal Telegraph Offices in Great Britain, and with the Inland Telegraph and International Cables throughout the world. Operators on board ship can therefore accept telegrams from passengers for transmission to any part of the world. Through rates to all points are furnished by the company to the pursers and operators of the ships, and are simply the usual land telegraphic rate plus the wireless or sea rate.

Telegrams from persons on shore to passengers on ships should be addressed in the following manner: (1) name of passenger, (2) name of ship, and (3) name of shore station through which it is desired to communicate, thus:

John R. Collins,
Steamship Lucania,
Sagaponack Wireless Station.

Digitized by Google

No 1—50. 1-5-06-20M. Sent date.....

MARCONI WIRELESS TELEGRAPH COMPANY OF AMERICA.

27 WILLIAM STREET (Lord's Court Building), NEW YORK.

No. 12/20 Siasconset STATION Sept 30 1912

Prefix S Code M Words 7

Office of Origin New York City

Service Instructions:

CHARGES TO PAY	
Marconi Charge	3 00
Other Line Charge	- -
Delivery Charge	- -
TOTAL	3 00

Station sent to	Time Sent	By whom sent
La	12.10 p m.	DJ

READ THE CONDITIONS PRINTED ON THE BACK OF THE FORM.

To: Evelyn Collins S.S. Lucania

Meet	me	at	Holland	House
on	arrival			
		A.	Frederick	Collins

FIG. 112.—Obverse Side of a Marconi Blank.

Digitized by Google

Operators should despatch telegrams strictly in the order received from the public, and as the time of communication is at present naturally limited, no time must be wasted. Fig. 112 is a reproduction of the obverse side of a wireless telegram form. A receipt for the sum charged for each message is given on board ship by the purser or operator, and on shore, subject to the usual conditions exacted by the collecting office. These conditions appear on the reverse side of the telegram form, Fig. 113, and the operator should have the person who sends the message sign it.

Should any telegram that is accepted by or to any of the associated companies' stations fail to reach its destination and the non-delivery is proved to be in any way due to negligence on the part of the company's employees, the amount paid will be refunded to the sender when he presents the receipt for the sum paid.

Rates for Wireless Messages.—Wireless communication is now open through the new Marconi station at Sea Gate, Long Island, and New York Harbor. Messages may be sent to outgoing or incoming steamers when they are down the Bay, or at any time when the vessels are at a point between their docks and Babylon, Long Island. The map shown in Fig. 114 indicates the location of the Marconi marine service stations on the Atlantic seaboard. Messages to outgoing and incoming steamers can also be sent *via* Babylon, L. I., when ships are about five hours from New York City; *via* Sagaponack, L. I., when eight hours from New York; *via* Siasconset, Mass.,

Digitized by Google

MARCONI WIRELESS TELEGRAPH COMPANY OF AMERICA.

27 WILLIAM STREET (Lord's Court Building), NEW YORK.

CONDITIONS UNDER WHICH MESSAGES ARE ACCEPTED.

Neither the Marconi Wireless Telegraph Company of America nor any Telegraph Company or Government Telegraph Administration or other Company or person whatsoever concerned in the forwarding of this telegram shall be liable for any loss, injury, or damage, from non-transmission or non-delivery or neglect in relation to this telegram, or delay or error or omission in the transmission or delivery thereof, through whatever cause such non-transmission, non-delivery, neglect, delay, error, or omission shall have occurred.

The Company reserves to itself the right to refuse to transmit any message.

Having read the above conditions I request that this telegram may be forwarded according to the said conditions by which I agree to be bound.

Signature, ...

Address, ...

FIG. 113.—Reverse Side of a Marconi Blank

Digitized by Google

when fourteen hours out; and through Sable Island, *via* Camperdown, Nova Scotia, when forty hours from New York. The rates for such messages are as follows: For

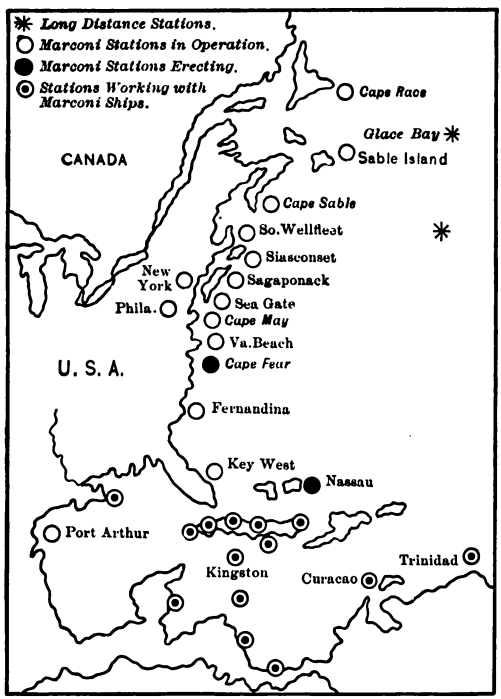

FIG. 114.—Marconi Stations along the Atlantic Seaboard.

ten body words, address and signature not included, $2.00 is charged plus the land-line charges *via* Sea Gate, Babylon, or Siasconset, and $4.00 and land charges *via* Sable Island.

Messages destined for all Atlantic liners routed *via*

Digitized by Google

Sea Gate, Sagaponack, Siasconset, South Wellfleet or Cape May may be filed at any office in the United States of the Postal Telegraph Cable Company or the Western Union Telegraph Company. Those routed *via* Sea Gate or Sable Island can be filed at any office of the Western Union Company, the operators at these offices having full instructions as to the sending of such messages. Long-distance telegrams may now be sent to certain ships carrying Marconi long-distance receiving apparatus throughout the whole course of the voyage across the Atlantic. These vessels can be reached at any time by long-distance wireless during the entire voyage in either direction. Messages for these ships must be filed at the office of the American Marconi Company, 27 William Street, or the Company's head office, 18 Finch Lane, London. Messages from points outside of New York to these vessels are sent to New York in care of the Marconi Company.

How Ships are Located in the Atlantic Ocean.—With all these liners crossing and recrossing the Atlantic Ocean means must be provided so that the operator at any shore station, or on board any ship, may be able to quickly ascertain the position of any ship at any given time. To enable them to do this, the Marconi Company furnishes operators in charge of stations at the beginning of every month with a communication chart, as shown in Fig. 114. The chart measures 14 by 20 inches, and should be framed and hung on the wall or kept within easy reach.

Digitized by Google

Assuming that a message has been received at the Sagaponack Station for transmission to the Cunard Liner Umbria, the operator at the former looks on his chart to ascertain the ship's whereabouts in the ocean lane; he may find that it is several hundred miles out of the reach of his station, but that the New York of the American Line is, we will say, about midway between Sagaponack and the Umbria. The operator then signals the New York, and when this vessel responds he transmits the message with instructions to repeat it to the Umbria. In a like manner any ship in the entire Atlantic service can be located and gotten in touch with. Toward the end of the month the vessels may be found dropping behind their schedule according to the communication chart, but this is easily corrected by checking them off with a pencil and the chart thus kept fairly accurate. A thorough study of the chart reproduced will prove of much value to the operator who desires a position with the Marconi Company.

Offices of the Marconi International Marine Communication Company, Limited

Head Office:
18, Finch Lane,
London, E.C., England.

American Office:
27 William Street,
New York City.

Digitized by Google

List of United States Navy Ships and Shore Stations and Type of Apparatus Installed.

The following table shows the number and type of ships and shore stations of the U. S. Navy. Owing to the large number of changes at present being made, and because of the fact that a number of installations are composite sets, the accuracy of the table is not vouched for.

	Ship.	Shore.	Total.
Telefunken	28	11	39
International Telegraph Construction Co. (Shoemaker)	24	1	25
National Electric Signaling Co. (Fessenden)	21	2	23
DeForest	4	3	7
Marconi	7	.....	7
Stone	3	1	4
Slaby-Arco	9	2	11
Massie	2	4	6
United Wireless Telegraph Co	7	1	8
Miscellaneous	2	1	3
Composite	35	16	51
Total	142	42	184

List of Wireless Telegraph Stations Controlled by the United States Army.—The Signal Corps has stations working at St. Michael, Alaska, and Safety Harbor, Alaska, the latter being the landing point for Nome. Wireless communication between these two stations was established by the Signal Corps in August, 1904. Since that time the service has been continuous, there not having been a single day's interruption in the transaction

Digitized by Google

of a large volume of business. The stations are equipped with small power plants, in which gasoline engines are the motive power, giving about three kilowatts effective energy for operating the transmitting devices. The system used in these stations is largely composite, most of it having been originated and constructed by Captain L. D. Wildman of the Signal Corps, who had charge of them.

The Signal Corps have wireless stations at Zamboanga and Jolo, Philippine Islands, which have the same capacity and power as the Alaskan stations above named. There are small stations for the use of the Coast Artillery and local work at the following points: Forts Hancock, Wadsworth, Wood, Schuyler, Trumbull, Michie, Terry, and Wright, New York; Benicia Barracks, Fort Mason, and Alcatraz Island, California; Forts Worden and Flagler, at the entrance to Puget Sound. All of these stations are largely composite in their equipment, apparatus having been purchased from various makers of wireless apparatus. The stations at Forts Wright and Schuyler are about one and one-half kilowatts, and have in the past been generally in free communication with each other, the distance being about 100 miles.

Where to Apply for Positions.—Applicants for positions may communicate with the following:

Chief Engineer Marconi Wireless Telegraph Company of America, 27 William Street, New York City.

Chief, Bureau of Navigation, United States Navy, Washington, D. C.

Digitized by Google

Chief Signal Officer, United States Army, Washington, D. C.

Beginners are preferred who have a fair working knowledge of electrical apparatus, and who can send and read in both the ordinary Morse and the Continental codes. Those wishing to enlist in the United States Navy must meet the following requirements:

DEPARTMENT OF THE NAVY,
BUREAU OF NAVIGATION,
WASHINGTON, D. C.

1. A candidate for enlistment as an electrician for wireless telegrapher must have a working knowledge of telephones, measuring-instruments, call-bells, etc., and be able to connect up same to batteries and make minor repairs to them. Familiarity with ordinary telegraph instruments, while an aid in acquiring a working knowledge of wireless telegraphic instruments, is not an essential qualification for enlistment as a wireless telegraph operator.

2. Applicants for enlistment must be able to write legibly and be good spellers.

3. Applicants will be enlisted as electricians, third class, at $30 per month, and, if practicable, given a course of instruction on some cruising ship or wireless telegraph shore-station already equipped, and as found qualified will be assigned to cruising-ships as needed, either in charge of the station or as assistants to the electrician in charge.

4. Men detailed as operators will be eligible to promotion to higher ratings of the electrical branch when they qualify as operators, and have served the required probationary time under the regulations, through the successive grades to chief electricians at $60 per month, when they prove their ability to take charge of the wireless telegraph station and interior communication on board ship and have been assigned to duty.

(Signed) H. C. TAYLOR,
Chief of Bureau.

Digitized by Google

Any request made to the Bureau of Navigation, Navy Department, Washington, D. C., in reference to entering the naval service, will receive prompt attention. Receiving ships and recruiting stations are located throughout the country, and recruiting parties make occasional visits to the large and small cities. The Navy Department has fitted out two schools for training wireless operators for the Navy, giving preference to the man who possesses some electrical knowledge. He is required to pass an examination and is then enlisted for a term of four years with the rate of third-class electrician and given a course of instruction at the Navy Electrical Class either at the Navy Yard, New York City, or at Mare Island, California. Upon application to the Bureau of Navigation, a booklet containing full information will be sent free of charge.

Applicants for enlistment in the U. S. Army will find the following circular of interest:

WAR DEPARTMENT,
OFFICE OF THE CHIEF SIGNAL OFFICER,
WASHINGTON, D. C.

Enlistment Circular.

The following information is published to answer, in general, inquiries regarding employment or services in the Signal Corps of the Army. Civilians are not employed, but enlistments of desirable persons will be made as privates, and promotions to the higher grades made on merit as vacancies occur and the soldier's qualifications, conduct, and service justify. Promotions are usually rapid in the case of men of high character who show proficiency in special phases of electrical or other Signal Corps work. The grades and pay of enlisted men of the Signal Corps are as follows:

Digitized by Google

	In U. S.	Abroad
Master signal electricians, per month.....	$75.00	$90.00
First-class sergeants, " "	40.00	54.00
Sergeants, " "	34.00	40.80
Corporals, " "	20.00	24.00
First-class privates, " "	17.00	20.40
Privates, " "	13.00	15.60

with a slight increase each month after three years' service. All enlisted men, in addition to their regular pay, receive rations, quarters, clothing, fuel, bedding, medicine and medical attendance, when required.

Owing to the professional and technical nature of the service in the Signal Corps, a large proportion of the enlisted men are non-commissioned officers. The clothing allowance of a first-class private is about $138.00 for one enlistment; of a corporal, about $141.00; of a sergeant, about $141.00; and the portion of this not used in purchasing clothing is paid to the soldier in cash on discharge. When on detached service at a station where there are no troops, as many of the Signal Corps operators are, the soldier draws $1.15 per day as commutation of rations and quarters. Every soldier is privileged to deposit his savings with any army paymaster, and for sums so deposited, for the period of six months or longer, will be paid interest at the rate of 4 per cent per annum.

After thirty years' service a soldier is entitled to be retired, and to receive monthly during life three-quarters of the regular pay he was receiving at date of retirement, and in addition $9.50 per month as an allowance for clothing and subsistence. Non-commissioned officers not more than thirty years of age are eligible for examination after two years' service for commission in the line of the army. Applicants for enlistment must be between 21 and 35 years of age. They must be unmarried, of good antecedents and habits, and free from bodily defects and diseases. They must be citizens of the United States, or have made legal declaration of their intention to become citizens of the United States, and must be able to speak, read, and write the English language.

It is necessary that the applicant furnish a certificate of good moral character, with particular reference to sobriety, and also his

Digitized by Google

experience, if any, as an electrician, telegraph operator, or lineman. Enlistments are for three years. Recruits, as a rule, are first sent to one of the Signal Corps Schools of Instruction, where they remain about six months, to fit them for duty in the United States, Philippines, or Alaska, or wherever the exigencies of the service may demand. These schools are located at Fort Wood, New York Harbor; Omaha Barracks, Nebraska; and Benicia Barracks, California, where courses are given in telegraphy, including wireless, military signalling, electricity, photography, line construction, general instructions concerning the care and handling of Government property, and rendering the necessary reports; handling moneys received at military telegraph offices, as well as practical military instruction covering the duties of a soldier. The opportunities for making use of any special aptitude are most excellent, and in many cases have led to rapid promotion and most agreeable service.

Probably no other branch of the Government service gives its men such an opportunity for travel and seeing the world. The care and operation of a complete network of cable and telegraph lines, and the installation of the fire-control system in the seacoast defences, take them to all parts of the United States, the Philippine Islands, and Alaska. Upon expiration of term of service the Government returns a soldier to the original place of enlistment, or allows him in cash an amount sufficient to pay his transportation there. If you desire to enlist, application in your own handwriting should be made to this office, accompanied by the certificate above referred to, and if satisfactory you will be furnished instructions as to the recruiting officer to whom to apply, etc.

Applicants must defray their own expenses to the place of enlistment, as their fitness for milttary service can only be determined by a physical examination.

(Signed) A. W. GREELY,
Brigadier-General, Chief Signal Officer, U.S.A.

Digitized by Google

SERVICE REGULATIONS FOR COMMERCIAL OPERATORS

Regulations to be Observed at all Stations

1. The Instrument Rooms are strictly private, no strangers are allowed on the premises without a signed permit from the Managing Director.

2. All papers, books, reports and messages are strictly confidential.

3. No Engineer or Operator may vacate his post without authority from the Head Office. Before leaving the station, the retiring officer must make up his accounts to the day of his leaving, and shall hand over all accounts, papers, money and the property of the Company generally to his successor, who shall give him a written receipt for all he has received, and duly notify the Head Office.

4. The Staff at any station are under the authority of the Engineer (or, in the case of a station where there is no Engineer, the Operator in charge), who will be held responsible for the working of his station, and the Company's interests generally at that station.

5. The instruments must never be left unattended during working hours.

6. The General Report which is sent in weekly by every land station, and at the end of the round voyage in the case of a ship station, must be drawn up by the Officer in charge only, and is strictly confidential.

Digitized by Google

Signs and Prefixes

In addition to the Signs and Prefixes appearing on the "Authorized Code Signals" sheet, the following shall be used:

1. *Distress Signals.*—Vessels in distress send, at short intervals, the signal:—

▪▪▪ ▬▬▬ ▪▪▪ (S O S).

As soon as a station perceives the signal of distress, it must suspend all correspondence, and must not resume work until it has made sure that the communication consequent upon the call for assistance has been completed.

When a ship in distress adds, after a series of signals of distress, the call-signal of a particular station, the duty of answering the call rests with that station only. Failing any mention of a particular station in the signal of distress, every station which perceives the call is bound to answer it.

2. *Retransmission.*—Messages to be retransmitted bear the additional prefix ▬▪▪▬ which is prefixed to the "Official Instructions" in all messages received, and subsequently forwarded by a wireless telegraph station. Thus, a Government message requiring to be retransmitted would bear the prefix ▬▪▪▬ ▪▪▪ (X S), and so forth.

3. *End of Work.*—The end of work between ship and shore is indicated by the signal ▪▪▪ ▬▪▬ (S K).

4. *International Signalling Code.*—The signal ▪▬▬▪ ▪▬▪ ▬▪▪▪ (P R B) indicates that the station

Digitized by Google

calling wishes to communicate by means of the International Signalling Code. This signal must follow the ordinary call; and its use, as a service signal, is prohibited, for any purpose, other than that above indicated. Messages in this code, addressed to a wireless telegraph station for onward transmission are not translated by that station.

5. *Completion of Translation.*—The signal ▪▪▬▪▪▪ is used by the translating station to show that a translation has been completed, and the station is now ready to receive further messages.

6. *Request for Repetition.* — The signal ▪▪▬▬▪▪ indicates a request for repetition of something not understood, or request by translating operator for receiving operator to repeat message. The signal ▪▪▬▬▪▪ ▪▬▬ ▪▬ (? W A), followed by a certain word in the transmitted message, requests the transmitting operator to repeat what follows the word. In the event of more than one word being required, the number of words required would come after ▪▪▬▬▪▪, thus: ▪▪▬▬▪▪ 3 ▪▬▬▪▬. In the event of the whole of the message being required, the receiving operator would say ▪▪▬▬▪▪ all.

7. *Reply to a Service Message.*—Service messages which are replies to other Service messages are prefixed B Q (▬▪▪▪ ▬▬▪▬).

8. *Clear Signal.*—When all work has been transmitted, and the operator has nothing on hand, he may give the signal N N (▬▪ ▬▪).

Digitized by Google

9. *All Correct.*—For general use the signal O K (▬ ▬ ▬ ▬ ▪ ▬) signifies that all is right.

10. *How are Signals?*—The signal H Q (▪ ▪ ▪ ▪ ▬ ▬ ▪ ▪ ▬) signifies to the receiving operator that the transmitting operator wishes to know the quality of his signals.

Numbering of Messages

Every message shall bear a number.

Numbering shall begin at midnight and finish at midnight.

In the case of a transmitted message, the sender shall number the message immediately before it is sent; in the case of a received message, the receiver shall take the number as sent by the transmitter.

Service messages will bear no number.

Great care must be taken to see that the message numbers, either transmitted or received, are not duplicated.

Priority.—In all cases Government messages must be sent first (except in the case of an urgent Service message), private messages next, and press last.

The Order of a Message.—All messages shall be sent in the following order:

1st. *Prefix* (Denoting the nature of the message).
2d. *Number* of the message.
3d. *Station to* (the station of its final destination).
4th. *Station from* (the station where the message was handed in).
5th. The number of words.
6th. The code time.

Digitized by Google

7th. The Break Signal ▬ ▪ ▪ ▬
8th. The name and address.
9th. The Break Signal ▬ ▪ ▪ ▬
10th. The text of the message.
11th. ▬ ▪ ▪ ▬
12th. The Signature (if any).
13th. ▪ ▬ ▪ ▬ ▪

Timing of Messages

The following system of timing has been adopted, and must be strictly adhered to:

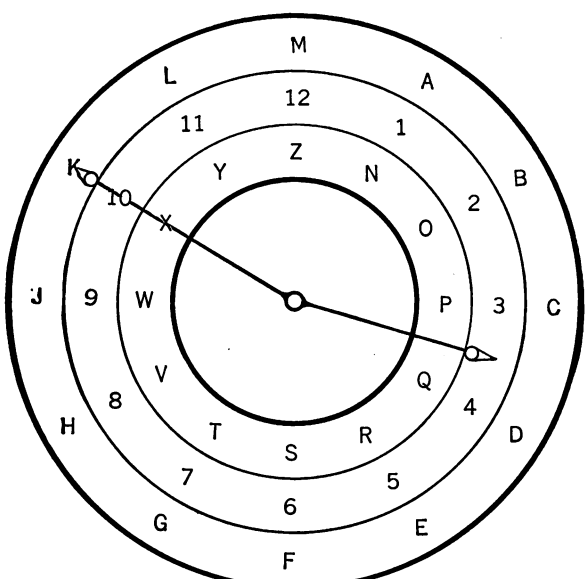

Fig. 115.—Timing Messages.

Digitized by Google

Explanation.—The hours from 1 P.M. to 12 midnight comprise the alphabet from N to Z, the letter U being omitted; the hours from 1 A.M. to 12 noon are denoted by the first twelve letters of the alphabet, the letter J being omitted.

If the letters are used singly, they show the hours only. If they are used in combination they show the hours and in addition a certain period of minutes.

Thus S denotes 6 P.M., S Q 6.20 P.M.

I denotes 9 A.M., I C 9.15 A.M., and o on.

Periods of less than five minutes are not taken into consideration, thus: 9.52 P.M. would be coded as 9.50, but 9.53 P.M. would be coded as 9.55.

Transmission of Messages

1. *Order of Transmission.*—Between two stations, radiograms of the same rank are transmitted separately in alternative order, or in series consisting of several radiograms, as may be determined by the coast station, provided that the time occupied in the transmission of any one series does not exceed 20 minutes.

2. *Calling of Stations, and Transmission of Messages.*—1. As a general rule, it is the ship station which calls the coast station.

2. The call must only be made, as a general rule, when the distance of the ship from the coast station is less than 75 per cent of the normal range of the latter.

3. Before beginning to call, the ship station must adjust its receiving apparatus to the highest possible

Digitized by Google

degree of sensitiveness and make sure that the coast station which it wishes to call is not engaged in communication. If it finds that transmission is taking place it awaits the first break.

4. The ship station uses, for calling purposes, the normal wave-length of the coast station.

5. If in spite of these precautions the exchange of public radiotelegraphic traffic is interfered with, the call must cease at the first request made by a coast station open for public correspondence. This station must then indicate approximately how long it will be necessary to wait.

6. The call comprises the signal ▬ ▪ ▬ ▪ ▬, the call-signal of the coast station thrice repeated, the word "de" followed by the call-signal of the transmitting station thrice repeated.

7. The station called answers by giving the signal ▬ ▪ ▬ ▪ ▬, followed by the call-signal of the calling station thrice repeated, by the word "de," by its own call-signal, and by the signal ▬ ▪ ▬

If a station called does not reply as the result of the call thrice repeated at intervals of two minutes, the call can only be renewed after an interval of half-an-hour, the station making the call having first ascertained that no radiotelegraphic communication is in progress.

8. As soon as the coast station has answered, the ship station makes known:

(A) The distance of the ship from the coast station in nautical miles.

Digitized by Google

(B) Its true bearings in degrees reckoned from 0 to 360.

(C) Its true course in degrees reckoned from 0 to 360.

(D) Its speed in nautical miles.

(E) The number of words which it has to transmit.

9. The coast station replies by indicating the number of words which it has to transmit to the ship.

10. If transmission cannot take place at once the coast station informs the ship station approximately how long it will be necessary to wait.

These details should be comprised in a service message, which will always be the first message exchanged between ship and shore.

When a coast station received calls from several ship stations, the coast station decides the order in which the ship stations shall be allowed to transmit their correspondence.

The sole consideration which must govern the coast station in settling this order is the necessity of allowing every station concerned to exchange the greatest possible number of radiograms.

Before beginning the exchange of correspondence, the coast station informs the ship station whether transmission is to take place in alternate order or in series; it then begins transmission or follows up these service instructions with the signal — • — (invitation to transmit).

The transmission of a radiogram is preceded by the signal — • — • — and terminated by the signal • — • — •, followed by the call-signal of the transmitting station.

Digitized by Google

When the radiogram to be transmitted contains more than 40 words, the transmitting station interrupts transmission after each series of about 20 words with a mark of interrogation ▪ ▪ ▬ ▬ ▪ ▪, and only continuous transmission after having obtained from the receiving station the repetition of the last word duly received, followed by a mark of interrogation.

In the case of transmission by series, an acknowledgment of receipt is given after each radiogram.

11. When the signals become doubtful, it is important that recourse should be had to all possible means for effecting transmission. For this purpose the radiogram is repeated at the request of the receiving station, but not more than three times. If in spite of this triple transmission, the signals are still unreadable the radiogram is cancelled. If an acknowledgment of receipt is not received the transmitting station again calls the receiving station. If no reply is made after three calls, transmission is not continued.

12. If the receiving station, in spite of defective reception, thinks that the radiogram may be delivered, it inserts the service instruction "Reception doubtful" at the end of the preamble, and sends on the radiogram.

13. Operators are prohibited from exchanging superfluous signals and words. Trials and practice are only permitted at stations in so far as they do not interfere with the service of other stations.

14. All stations are bound to exchange traffic with the

Digitized by Google

minimum expenditure of energy required for obtaining effective communication.

3. *Maritime Intelligence.*—All maritime intelligence relating to casualties, derelicts, overdue vessels, etc., either reported to the station by vessels, or otherwise coming to the knowledge of the officer in charge of the station, must be immediately telegraphed to "Lloyds, London." It is essential that no information of this character be communicated to any person, firm or corporation other than Lloyds.

Copies of Messages

Messages received for delivery shall be written in duplicate by means of a carbon.

The carbon copy shall be handed to the addressee, and the top copy retained. A message received for retransmission need not be written in duplicate.

All messages received, sent, or retransmitted, shall be filed away in numerical order at the end of each day's working.

Acknowledgment of Receipt

The acknowledgment of a message, or a batch of messages, should be preceded by the call-signal of the transmitting station, and followed by the call-signal of the receiving station.

The end of work between two stations is indicated by each station by means of the signal ▪ ▪ ▪ ▬ ▪ ▬ followed by its call-signal.

Digitized by Google

The Check

At the end of each communication, and, in the case of fixed stations, at the end of the day's work, the number of messages and service messages received and sent shall be checked.

This should be effected in the following manner:

Check. Sent 10.
Received 18.

The station receiving this should, if correct, reply in the following manner:

Check. Sent 18.
Received 10.

This check must be made when all work has been transmitted.

Checking of Cipher Messages, etc.

Messages in cipher should be carefully checked in the following manner:

The receiving station shall, when he has received the whole of the message, repeat it back, group by group, the transmitting station carefully checking each group from his written message.

Groups of figures appearing in messages, doubtful words, and commercial marks, should also be checked by the sender repeating the group or word (in abbreviated form in the case of figures) immediately after the signal

Digitized by Google

In receiving a message it is essential that Operators should be, as far as possible, absolutely satisfied of the correctness of the message, and no pains should be spared to obtain corrections and repetitions when necessary.

Regulations Respecting Messages Received from the Public or from Other Companies or Systems

1. The address of radiograms for ships at sea must be as complete as possible; they must include the following:

(A) Name of addressee, with further particulars if necessary.

(B) Name of ship in full, supplemented, in the case of ships bearing the same name, by the nationality of the ship.

(C) Name of coast station as it appears in the list.

2. All messages must be fully paid before being transmitted. Lists giving tariffs of all systems will be supplied to each station.

3. All messages received from the public, or from any other telegraph system, must be written distinctly, and in the case of messages handed in by the public, must bear the name and address of the sender. Should the Operator have any difficulty in reading a message for transmission, he may ask the sender to re-write it or explain the doubtful portion.

4. The Operator shall give the sender of a message which complies with all the regulations, a receipt for the amount paid in full.

Digitized by Google

5. *Wording of Messages.*—Messages may be written in plain language, code language or cipher.

6. *Plain Language.*—Messages in plain language are those composed of words or figures which convey an intelligible meaning in one of the recognized languages.

7. *Code Languages.*—Messages in code languages are comprised of real words not forming comprehensible phrases, or of groups of letters which can be pronounced and have the appearance of real words. The recognized languages from which the words may be drawn are the following:

English,	French,	German,
Italian,	Spanish,	Portuguese,
Dutch,	Latin,	

Combinations formed by running together of two or more words are not permissible.

8. *Cipher.*—Composed of groups of figures or letters having a secret meaning.

9. *Charging.*—In messages in *plain language*, the number of letters allowed to a word is 15. Words containing more than 15 letters up to an additional 15 letters are charged as two words. In all telegrams, every isolated letter or figure is charged for as one word.

10. *Code Messages.*—Code words are charged at 10 letters to a word.

11. *Cipher Messages.*—Letters or figures in cipher are charged 5 figures or letters to a word.

12. *Evasions.*—Words incorrectly spelt so as to reduce

Digitized by Google

the number of letters below the maximum, or incorrectly joined together contrary to the usage of the language, are inadmissible.

13. *Compound Words.*—Ordinary compound words, and names of places, ships, towns, countries, provinces, family names, written without a break are counted as single words, but if joined by a hyphen, or separated by an apostrophe, they are counted as so many separate words.

14. The "Station to" of any message, whatever its length, is charged as one word.

Messages not Accepted for Transmission

The following are not admitted:

(A) Telegrams with prepaid replies.
(B) Telegraph money orders.
(C) Collated telegrams.
(D) Telegrams "to follow."
(E) Paid service telegrams, except as regards transmission over the ordinary telegraph system.
(F) Urgent telegrams, except as regards transmission over the ordinary telegraph system.
(G) Telegrams to be delivered by express or by post.

In the transmission of radiograms from ship stations to coast stations the date and time of handing in are omitted from the preamble.

On retransmission over the ordinary telegraph system, the coast station inserts, as the indication of the office of origin, its own name, followed by that of the ship, and gives as the time of handing in, the time of receipt.

Digitized by Google

American and Canadian Counting and Charging

The charging and counting of inland messages in the United States and in Canada are calculated as follows:

1. A good and sufficient address (which must include the name of the State and Province) and the signature, which may include a title such as President or Managing Director, are transmitted free of charge.

2. The charge made is determined from a minimum toll which covers the address, text and signature of a message having a text of 10 words or less, plus a further toll for any additional words beyond 10 in the text, calculated at a uniform rate per word, the tolls and rates are fixed by the liners over which the message passes, and will be found in the Tariffs.

3. Dictionary words, initial letters, surnames of persons, names of cities, villages, states, or territories, or Canadian provinces, are counted and charged as one word. Abbreviations of the names of towns, villages, states, territories, or provinces, are counted and charged as written in full.

4. Abbreviations of weights and measures in common use are counted and charged as words.

5. All pronounceable groups of letters when not combinations of dictionary words are counted and charged each group and word. When such groups are made up from dictionary words, each dictionary word is counted and charged as a separate word.

6. Figures, decimal points, bars of division and letters

Digitized by Google

(except as in paragraphs 4 and 5, in groups or singly, are each counted and charged as one word.

7. In ordinal numbers, the affixes st, nd, rd, and th, are each counted and charged as one word only.

Reports, Logs and Abstract Sheets

Daily Logs.—Each station is supplied with a log book. The logs must be carefully filled up and sent to the Head Office.

In the case of land stations they shall be sent in daily, in the case of ship stations they shall be sent in at the end of the round voyage, together with the abstract sheets and reports.

The General Report.—This report must be made up by the Officer-in-Charge of the station only, and is strictly confidential. It should contain, in full, details of working for the week or voyage and any suggestions which the Officer-in-Charge may think likely to forward the Company's interests.

The Technical Report.—This report must contain full details of the state of the installation. Any faults, or accidents (with details of how they were rectified), must be fully described; also any additions or alterations which the Engineer or Operator-in-Charge may consider advisable.

Abstract Sheets.—These sheets must be carefully filled up and checked.

In the case of a ship station they shall be sent to the

Digitized by Google

Head Office immediately the ship completes the round voyage.

In the case of a land station they shall be sent in at the end of each month.

By order,

THE WIRELESS TELEGRAPH COMPANY, LIMITED,

Secretary.

Instructions to Govern Communication between Wireless Telegraph Station and Ships.

For Naval Operators.

I. A vessel wishing to communicate with a station and having ascertained by *listening in* that she is not interfering with messages being exchanged within her range should make the call letter of the station at a distance not greater than 75 miles from it.

II. The call should not be continuous, but should be at intervals of about three minutes in order to give the station a chance to answer.

III. After the station answers the vessel should send her name, distance from station, weather, and number of words she wishes to send; then stop until the station makes O. K. signals, the number of words she wishes to send the vessel, and signals go ahead.

IV. Then the vessel begins to send her messages, stopping at the end of each 50 words and waiting until the station signals O. K. and go ahead; when all messages have been sent she will so indicate If the sender desires

Digitized by Google

to designate the Western Union or Postal Telegraph system for further transmission of his message, he should do so immediately after the address, as, for example: "A, B, C, Washington, D. C., via W. U. (or P. T.)."

V. When a vessel has indicated that she has finished, the station will send to the vessel such messages as she may have for her in the following order:

(*a*) Government business, viz., telegrams from any Government Departments to their agents on board.

(*b*) Business concerning the vessel with which communication has been established, viz., telegrams from owner to master.

(*c*) Urgent private dispatches, limited.

(*d*) Press dispatches.

(*e*) Other dispatches.

VI. In the case of the Nantucket Shoal lightship, it will, immediately on receiving the vessel's call, acknowledge, and (after receiving vessel's name, distance, weather report, and number of words she wishes to send) transmit the first three to Newport, and then tell the vessel to go ahead with her messages.

VII. After receiving these and sending the vessel any message on file for her, the lightship will transmit to Newport messages received from the communicating vessel in the following order:

(*a*) Government business.

(*b*) Urgent private dispatches, limited.

(*c*) Press dispatches.

(*d*) Other dispatches.

Digitized by Google

VIII. A naval wireless telegraph station has the right to break in on any message being sent by a vessel at any time, and the right of way may be given at any time to a government vessel or one in distress.

IX. When two or more vessels desire to communicate with a naval wireless telegraph station at the same time the one whose call is first received will have right of way, and the others will be told to wait and will be taken up in turn. Vessels having been told to wait must cease calling.

X. In case communication is not established with any ship for which messages are on file, the naval wireless telegraph station will notify the telegraph company from which the messages were received, giving sufficient information for them to identify the telegrams and notify the sender.

XI. In order to obtain the best results both sending and receiving apparatus should be tuned to wave length of 320 meters.

XII. Until further notice the speed of sending should not exceed 12 words per minute.

XIII. In order that all messages received at naval wireless telegraph stations may be forwarded to ships for which they are intended, and in order that all ships equipped with wireless telegraph apparatus may receive storm warnings, they should always report when in signaling distance of a naval wireless telegraph station.

XIV. The service being without charge at present, the Government accepts no responsibility for the recep-

Digitized by Google

tion or transmission of messages from or for passing vessels. Every effort will be made to transmit all messages without error and as expeditiously as possible. It must be remembered that errors are not uncommon in ordinary telegraph and cable messages, so that due allowance should be made.

XV. In order that the service may be made as good and as useful as possible, it is requested that complaints should be promptly reported to the Bureau of Equipment as soon as possible after the cause therefor, giving date, hour, and other details, to enable the Bureau to investigate the case.

XVI. Information regarding the naval wireless telegraph service will be published in "Notices to Mariners."

By order of the Bureau of Equipment.

H. M. HODGES,
Commander, U. S. N., Hydrographer.

Distress Signals

Three calls for help are now used in wireless telegraphy —two at sea and one on land. They are "S O S," "C Q D" and "S 5 S."

"C Q D," is the Marconi call that gained prominence at the time of the *Republic* disaster. "C Q" formerly meant "All stations stand by!" The "D" was added to denote danger. It consists of two dots, a space and a dot; two dots, a dash and a dot, a dash and two dots.

"S 5 S" is, "S O S" in the Morse code, which is used by land lines.

Digitized by Google

"S O S" is the international danger signal adopted by the convention of wireless telegraph companies held at Berlin in 1906. It is solely a call to be used in times of distress to attract all stations on land and sea that may be within reach. It is a simple call, consisting of three dots, three dashes and three dots.

Wireless Call Book.

The Government Printing Office, Washington, D. C., will send to any address on receipt of ten cents a book giving the names, locations, call letters, wave lengths, and makes of apparatus of all government and commercial ships and shore stations.

Digitized by Google

CHAPTER XII

WIRELESS TELEPHONY

By Newton Harrison, E.E.,
Instructor of Electrical Engineering, Newark Technical School.

Wireless telephony differs from wireless telegraphy in that speech is transmitted instead of the alphabetic code. The character of the electric waves and the means for generating them also differs from those employed in wireless telegraphy and which has been described in the preceding chapters.

Forms of and Means for Producing Electric Waves.—In the usual system of wireless telegraphy a series of damped waves, as shown in Fig. 116, and which are periodic in time are produced. In wireless telephony it is necessary to employ sustained waves, the amplitude of which is constant, as illustrated in Fig. 117.

There are three known and tested means for producing the forms of electric waves as described above, and these are:

(1) The Leyden jar or induction coil, the discharge from either setting up electric oscillations which produce waves of the first order.

Digitized by Google

(2) The high-frequency alternating-current generator which is capable of producing oscillations of the second

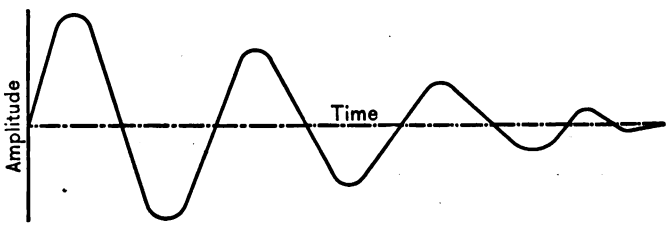

FIG. 116.—Damped Waves.

order and which have a periodicity of from 40,000 to 100,000 cycles per second.

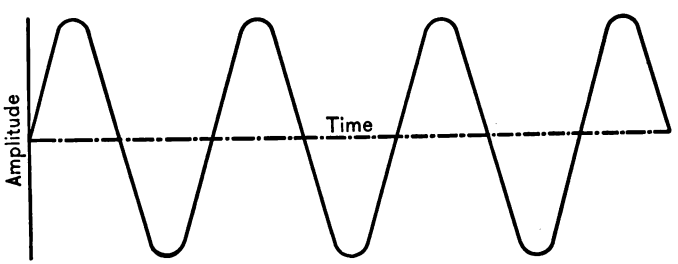

FIG. 117.—Sustained Waves.

(3) The oscillation arc lamp, which also produces oscillations of the second order and which has a frequency of as high as 1,000,000 per second.

The General Method Employed.—Choosing one of the two latter types of generators for producing continuous and sustained oscillations, an aerial wire system for converting the oscillations into electric waves and

Digitized by Google

radiating them into space, and a telephone transmitter for impressing on these waves the characteristics of the voice, and which is graphically shown in the diagram, Fig. 118, the fundamental features of a practical wireless telephone transmitter are presented.

The complementary apparatus for receiving the electric waves includes an aerial wire system upon which the waves impinge and which converts them into electric

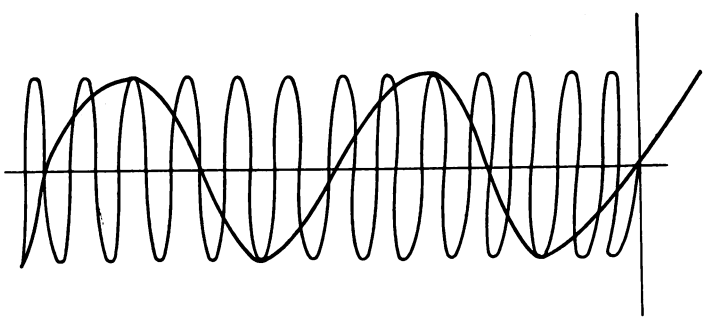

FIG. 118.—Voice Waves Impressed on Sustained Electric Waves.

oscillations, a detector by which a direct current is varied by the oscillations, and a telephone receiver.

The Transmitter.—Since the high-frequency alternator develops comparatively low frequencies and the oscillation arc lamp set up enormously high frequencies, and hence is much more efficient as a generator of electric waves, and, further, since the former is prohibitively expensive and the latter exceedingly cheap, the arc lamp will be chosen as the most suitable type of generator for the transmitter to be described.

Digitized by Google

Specifically, then, a wireless telephone transmitter comprises:

First: An arc lamp, usually fed by a direct current of 500 volts or more, with a shunt circuit around it con-

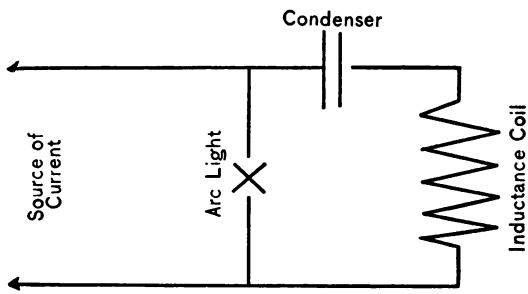

FIG. 119.—Arc Light Oscillation Generator.,

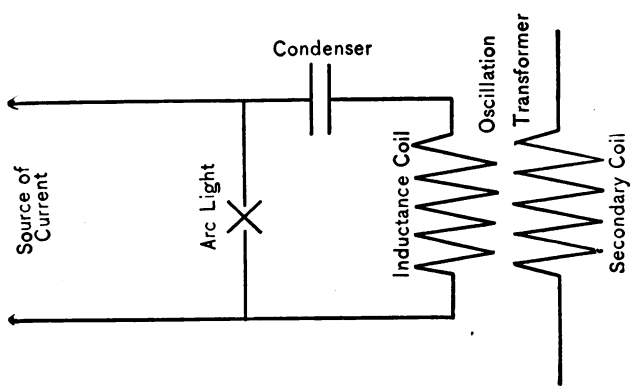

FIG. 120.—Arc Light Oscillation Generator and Electric-wave Emitter.

taining a variable condenser of low capacity, a variable coil of high inductance, and which may be the primary of an oscillation transformer, and a small resistance, all of which is shown in Fig. 119.

Digitized by Google

Second: An aerial connected to the secondary of the transformer and in which oscillations are set up in virtue of the mutual induction existing between the two coils, as in Fig. 120.

Third: A telephone transmitter circuit containing a source of electromotive force, and a primary coil, acting upon the secondary and the terminals of which are shunted across the arc lamp, the direct current being

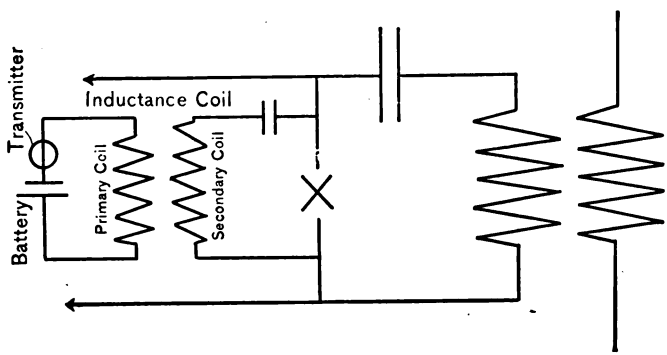

FIG. 121.—An Arc Light Wireless Telephone Transmitter.

prevented from flowing through the secondary by a small condenser, as shown in Fig. 121. The arc lamp as the real source of the operating waves must now receive attention.

The Oscillation Arc.—That an arc lamp around which is shunted an inductance and a capacity, as we have seen, will produce electric oscillations was dis-discovered by Rogers and Firth in 1893. That the oscillations were continuous in time and sustained in amplitude was discovered by Duddell in 1900, and, with

Digitized by Google

Marchant, he further deduced important laws relating to the production of these waves. The work of Duddell bears the same relation to wireless telephony that that of Hertz bears to wireless telegraphy. In 1903 while

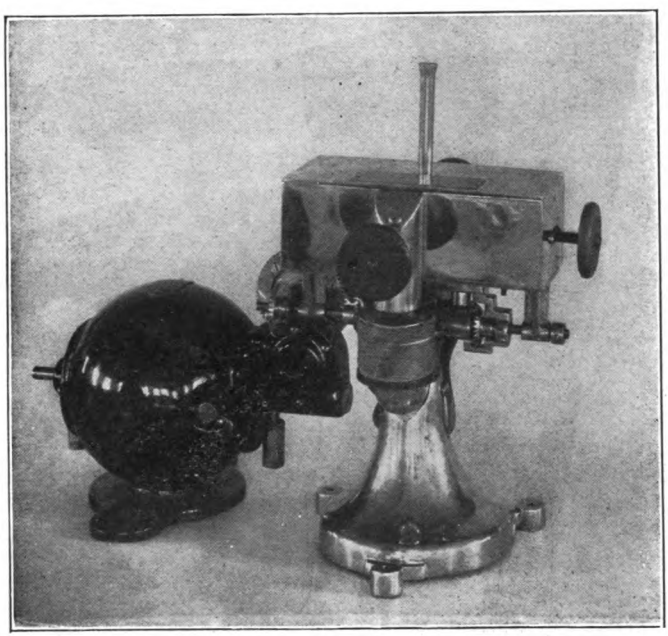

FIG. 122.—The Collins Rotating Oscillation Arc.

experimenting with the singing arc Poulsen found that if the arc burned in hydrogen the intensity of the oscillations are greatly increased.

Practical Application of the Arc to Wireless Telephony.—The first practical application of the direct current

Digitized by Google

arc to wireless telephony was made by Mr. Collins in 1900, and since that time he has devised many forms of arc lamps for the production of sustained oscillations and one of which is shown in the photograph, Fig. 122, in the plan view, Fig. 123, and the side elevation, Fig. 124. In this oscillation arc a pair of carbon or graphite disks

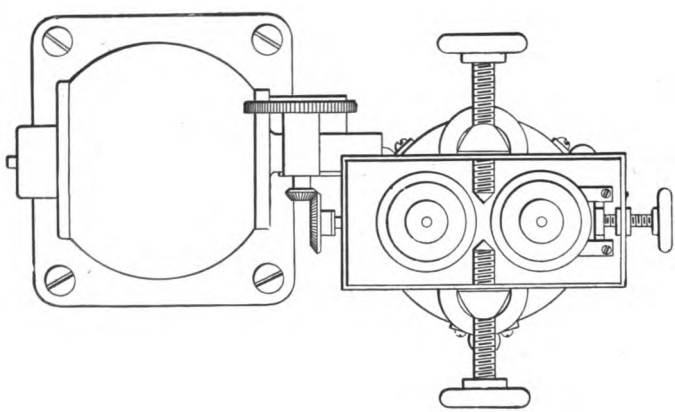

FIG. 123.—Plan View of the Collins Rotating Oscillation Arc.

are employed as the electrodes and between which the arc light burns.

The disks are mounted on parallel spindles, so that they are in the same plane and are connected by means of bevel gears to an insulated shaft. The disks are insulated from each other by fibre bushings inserted in the gearing, the casing forming one of the connections while the insulated bearing in the bottom of the casing forms the other. The gearing is so arranged that the

Digitized by Google

carbon disks are rotated in opposite directions, the power being furnished by a small motor.

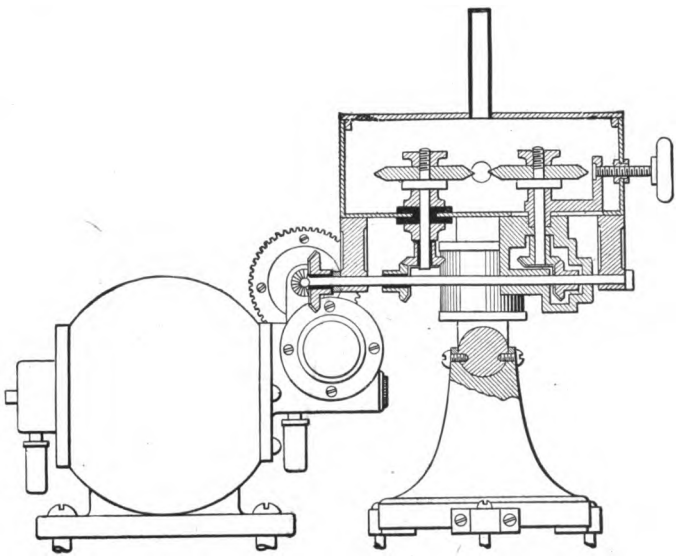

FIG. 124.—Side Elevation of the Collins Rotating Oscillation Arc.

Theory of the Oscillation Arc.—Duddell ascertained that an arc light will generate sustained oscillations only when there is a small change in the potential difference between the electrodes of the arc and when the corresponding change in the current through the arc is numerically greater than the resistance in the condenser and numerically less than the resistance of the direct current circuit in series with the arc.

The active or critical length of the arc must be maintained or oscillations will not be set up in the shunt

Digitized by Google

circuit. This active length becomes greater as the current increases, and it becomes less as the frequency increases. If the value of the direct current is too large then no oscillations will result. To obtain oscillations of the greatest amplitude as high a voltage as possible must be employed in the primary circuit feeding the arc.

Use of the Magnetic Field.—In his experiments Poulsen placed the arc in a powerful magnetic field. One of the advantages of this arrangement is that the lines of force at right angles to the arc increases its resistance and a higher initial voltage can be used than would otherwise be possible. On opposite sides of the Collins revolving oscillation arc a pair of electro magnets are disposed and these not only increase the resistance but serve to fix the arc at its critical length, and since this is the resonant point in the closed circuit the oscillations are amplified and this means a greater radiation of electric waves. A diagram of the primary circuit which includes the magnets is shown in Fig. 125.

Resonance or Oscillograph Tubes.—Both open and closed circuits may be tuned by any one of a number of methods, but a Collins resonance tube permits an instant visual determination of the quantitative value of the current and of the degree of resonance obtaining in the closed and aerial wire circuits. It consists of an exhausted tube into which two wires having a high melting point and whose ends nearly touch are sealed. Since the length of the light on the wires is proportional to the current strength it becomes at once apparent when

Digitized by Google

the circuits are in tune for when resonance obtains the light on the wires is longest. One terminal of the tube may be connected with any part of the oscillating

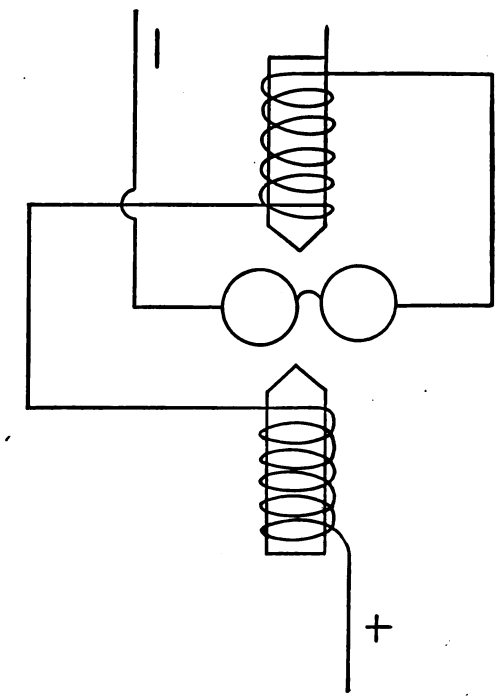

FIG. 125.—Rotating Oscillation Arc with Oppositely Disposed Electro-magnets.

circuit and the opposite end to a capacity. By means of a rotating mirror the wave form of the oscillations may be observed and it is easy to see if the oscillations are periodic or sustained.

Digitized by Google

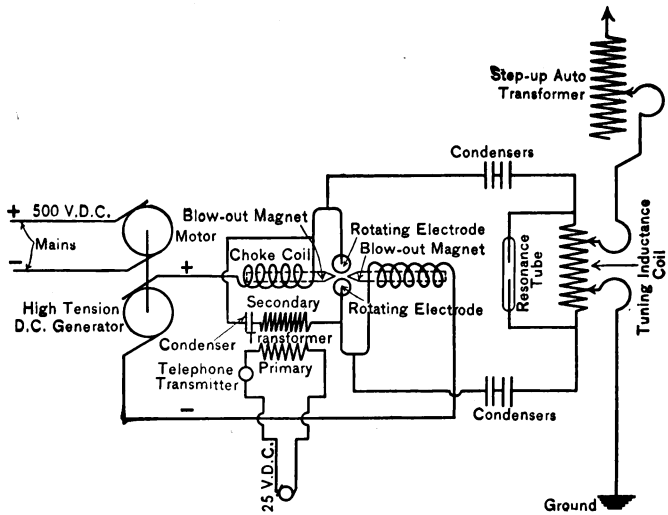

FIG. 126.—Collins Wireless Telephone Transmitter.

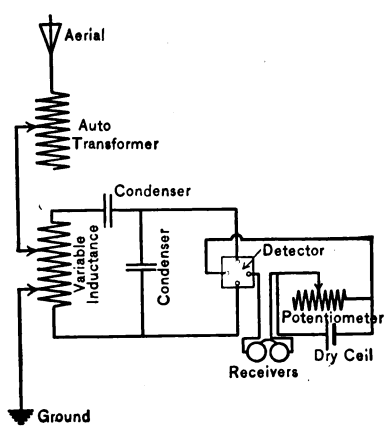

FIG. 127.

Digitized by Google

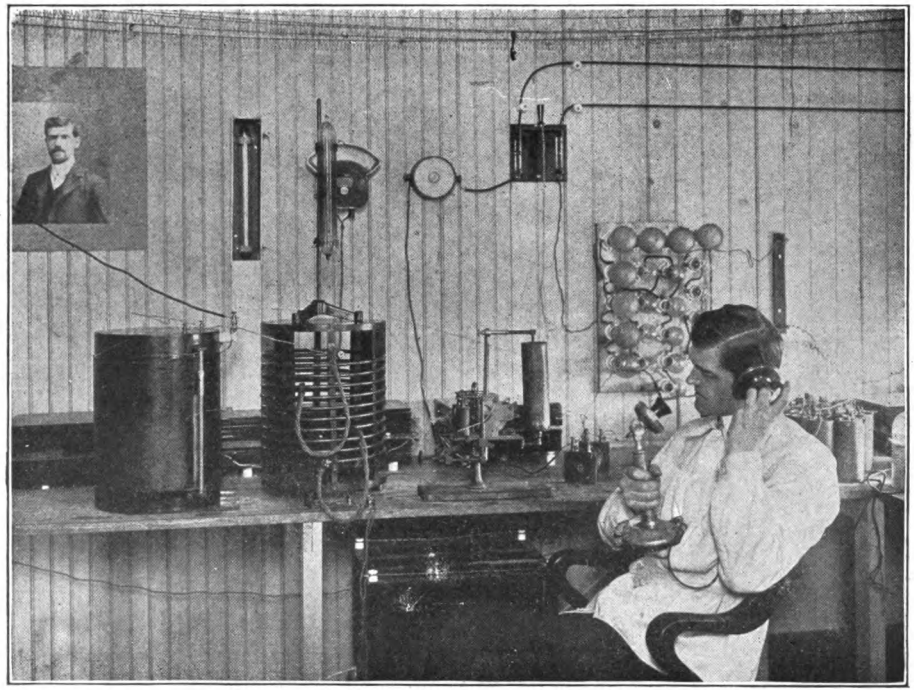

FIG. 128.—Collins Long-distance Wireless Telephone Transmitter.

Digitized by Google

Digitized by Google

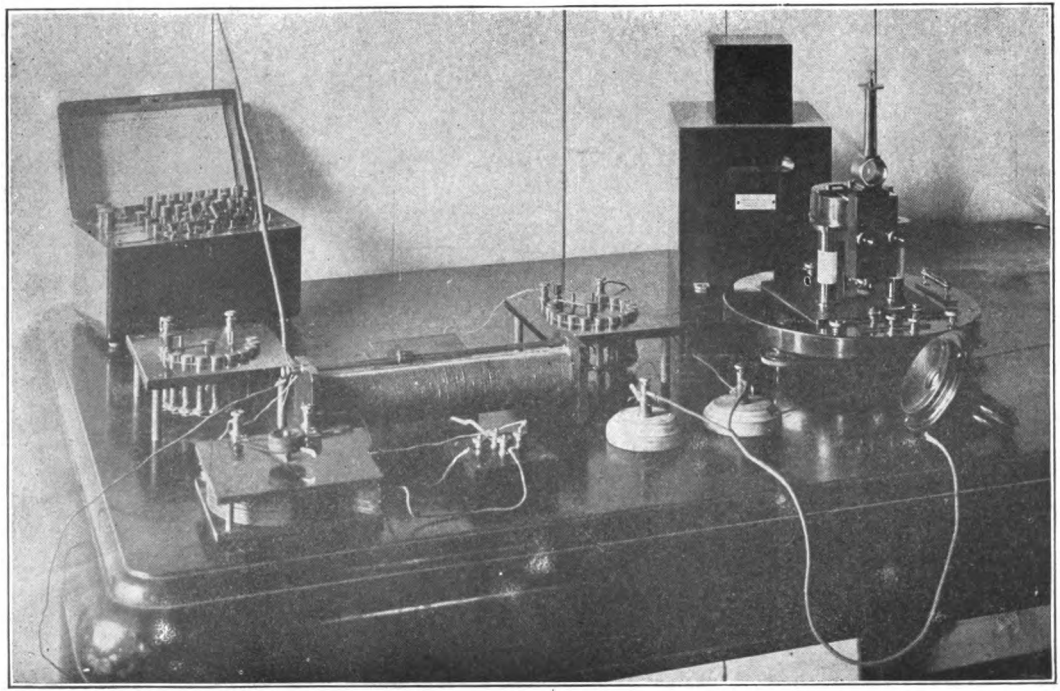

FIG. 129.—Collins Long-distance Wireless Telephone Receptor.

Digitized by Google

Digitized by Google

The Receptor.—Any receptor utilizing an electrolytic or thermo-electric detector can be used to receive wireless telephone messages. The detector employed in the system under consideration consists of two exceedingly fine wires crossed at right angles and forming a thermo-electric couple. Under the junction of these wires is placed a resistance wire which is heated by the oscillatory currents set up in the aerial wire system. A complete wiring diagram of both the transmitter and the receptor is given in Figs. 126 and 127, while photographic views are shown in Figs. 128 and 129 of the complete system.

Tests of the Wireless Telephone.—The system of wireless telephony above described is the culmination of work begun by Mr. Collins in 1899, and of the tests made with it the *Scientific American* in its issue of Sept. 19, 1908, says:

"The first of his series of tests took place between his laboratory in Newark, where he has a high-power sending station, and the Singer Building in New York city, about twelve miles away, on the night of July 9, when spoken words were clearly and loudly transmitted across the intervening space. The following day the distance was increased to thirty-five miles, when the receiving station was located at Mr. Collins's country home at Congers, N. Y., and then, amplifying the power of the sending station and bringing the instrument into sharp resonance, the Newark-Philadelphia tests were made the following Tuesday at midnight, from the top of the Land Title Building, a distance of 81 miles as wireless waves travel.

Digitized by Google

Digitized by Google

APPENDIX

List of Books on Wireless Telegraphy.

A History of Wireless Telegraphy. By J. J. Fahie (England). Published by Dodd, Mead & Co., New York. Price $1.50. 325 pages; 3 periods; 5 appendices; about 50 illustrations.

Every operator should read this book. It contains a history of wireless telegraphy from 1838 to 1899; it covers the subject thoroughly, and brings out the early work of Marconi very fully. An appendix contains valuable papers by Lodge, Branly, Hughes and others, as well as a reprint of Marconi's first patent.

Signalling Through Space Without Wires. (3d edition.) By Oliver J. Lodge (England). Published by D. Van Nostrand Co., New York. Price 6 shillings. 133 pages; 9 chapters; 66 illustrations.

An account of the work of Hertz and the men who succeeded him. As Hertz discovered the means to produce electric waves and to receive them, it behooves every operator to learn of his work and to reverence him. The book also contains the particulars of the first work done along the line of tuning and syntonization.

Electric Waves. By Heinrich Hertz (Germany). English Translation by D. E. Jones (England). Published by Macmillan Co., New York. Price $3.00. 279 pages; 14 chapters; 40 illustrations.

This book contains the classic papers of Hertz on his researches on the propagation of electric action through

Digitized by Google

space. It is of necessity a mathematical treatise, but there are many portions that can be read with profit by the ordinary operator. If possible, this he should do, for the whole structure of wireless telegraphy rests on the foundation laid by Hertz.

Les Applications Practiques des Ondes Electrics. By Albert Turpain (France). Published by C. Naud, Paris, France. Price 12 francs. 412 pages; 6 chapters; 271 illustrations.

A French book that contains an account of the work from 1897 to 1902, especially of the developments in Europe during this period.

Modern Views of Electricity. By Oliver J. Lodge (England). Published by the Macmillan Co., New York. Price $1.50. 422 pages; 15 chapters; 55 illustrations.

The object of this book is to explain without technicalities the most advanced thought on electrical subjects at the present time. The work is divided into four parts, i.e., (1) Electricity Under Strain; (2) Electricity in Locomotion; (3) Electricity in Whirling Motion or Magnetism; and (4) Electricity in Vibration, or Radiation, commonly called Light. All these are treated in a more or less popular manner, and are adapted to those who have some acquaintance with the ordinary facts and phenomena of electrical science.

Onde Hertziane e Telegrafo Senza Fili. By Oresta Murani (Italy). Published by Ulrico Hoepli, Milan, Italy. Price 2 l. c. 341 pages; 9 chapters; 170 illustrations.

A popular treatise in Italian on wirelesss telegraphy.

Digitized by Google

Wireless Telegraphy and Hertzian Waves. By S. R. Bottone (England). Published by Whittaker & Co. 4th Edition. 136 pages; 39 illustrations. 1910.

Wireless Telegraphy for Amateurs and Students. By S. M. St. John. Published by same, New York. Contains theoretical and practical information together with complete directions for performing numerous experiments in wireless telegraphy with simple home-made apparatus.

Wireless Telegraphy, Signal Corps, U. S. Army. By Edgar Russel. Fort Leavenworth, 1910. Principles of field and station equipment.

Wireless Telephone Construction. By Newton Harrison. Published by Spon & Chamberlin. New York, 1909. A comprehensive explanation of the making of a wireless telephone equipment. 74 pages; illustrated.

Official List of Wireless Stations. Published by the International Telegraph Bureau, Berne, Switzerland. List of stations open for international traffic and gives laws and regulations.

Handbook for Wireless Operators. Published for the Great Britain Post Office by Eyre & Spottiswoode, Ltd., 1909. This handbook is for operators working installations licensed by His Majesty's postmaster-general.

Report on Wireless Convention. Ordered by the House of Commons to be printed, 1907. Printed for H.M. Stationery Office by Wyman & Sons, Ltd. Report for the Select Committee, together with the proceedings of the committee, minutes of evidence and appendix.

Conference on Wireless Telegraph, Berlin, 1906. Printed for H. M. Stationery Office by Eyre & Spottiswoode. London, 1906. French text with English translation. Copy of the International wireless convention, additional undertakings, final protocol, and regulations signed at Berlin on the 3d day of November, 1906.

Conference on Wireless Telegraph, Berlin, 1906. Printed by Government Printing Office, Washington, D. C., 1907. International wireless telegraph convention concluded between Germany, the U S. of America, Argentina, Austria, Hungary,

Digitized by Google

Belgium, Brazil, Bulgaria, Chile, Denmark, Spain, France, Great Britain, Greece, Italy, Japan, Mexico, Monaco, Norway, the Netherlands, Persia, Portugal, Roumania, Russia, Sweden, Turkey, and Uruguay.

List of Wireless Telegraph Stations. Published by Navy Department, Bureau of Equipment, Washington, D. C. List of wireless stations of the world including shore stations, merchant vessels, and vessels of the U. S. Navy.

U. S. Navy Ship and Shore Station Plants. Published by Bureau of Equipment, Navy Dept., Washington, D. C. Description of wireless telegraph plants on board United States naval vessels and at United States naval shore stations.

Wireless Operators' Pocket Book. By Leon W. Bishop. Published by Bubier Publishing Company, Lynn, Mass. Contains information and diagrams.

Electric Waves. By H. M. Macdonald. Published by University Press, Cambridge, England, 1902. Being the Adams prize essay in the University of Cambridge.

Die Telegraphie ohne Draht. By Adolph Prasch (Germany). Published by A. Hartleben, Leipzig, Germany. Price 8 marks. 265 pages; 2 parts; 202 illustrations.

Gives a description of the work done up to 1902; it is printed in German and contains a few mathematical formulæ.

Die Telegraphie ohne Draht. By Agusto Righi and Bernhard Dessau (Italy and Germany). Published by Friedrick Vieweg & Sohn, Braunschweig, Germany. Price 16 marks. 481 pages; 13 chapters; 258 illustrations.

This book is also in German and is much more pretentious than the preceding volume, besides bringing the art up a year later, and up to and including Marconi's

Digitized by Google

experiments on the Carlo Alberta. The Marconi, Slaby-Arco, and Braun-Siemens and Halske systems are very fully treated.

La Télégraphie sans Fils. By André Broca (France). Published by Gauthier-Villars, Paris, France. Price 10 francs. 234 pages; 12 chapters; 52 illustrations.

A simple treatise in French on electric waves and their application to wireless telegraphy.

Wireless Telegraphy for Naval Electricians. By Commander S. S. Robison, U. S. Navy. Published by the U. S. Naval Institute. Annapolis, Md., 1911. 212 pages. This manual, first published in January, 1907, was revised in 1909 by L. W. Austin. The present, (2) revision contains the results of some of Dr. Austin's later researches.

Wireless Telegraphy: Its Origin, Development, Inventions, and Apparatus. By Charles Henry Sewell (United States). Published by D. Van Nostrand Co., New York. Price $1.50. 229 pages; in 4 parts; 85 illustrations.

The first book on wireless telegraphy published in the United States. The author's aim was to present a comprehensive view of the subject, giving its history, principles, and possibilities in theory and practice.

Wireless Telegraphy: Its Theory and Practice. By William Maver (United States). Published by The Maver Publishing Co., New York. Price $2.00. 199 pages; 15 chapters; 121 illustrations.

Contains an account of all the wireless systems at the time the text was prepared, and gives a theoretical and practical statement, as free as can well be from formulæ,

Digitized by Google

written in a manner designed to be clear to the general reader.

The Story of Wireless Telegraphy. By A. T. Story (English). Published by D. Appleton & Co., New York. Price $1.00. 215 pages; 12 chapters; 56 illustrations.

This is just what its name indicates—wireless telegraphy from its earliest conception to 1904, told in the simplest language.

Maxwell's Theory and Wireless Telegraphy. By Frederick K. Vreeland (United States). Published by the McGraw Publishing Co., New York. Price $1.50. 225 pages; 2 parts; 145 illustrations.

First part is a translation of Poincairé's physical treatment of Maxwell's theory—the latter being the basis of Hertz's deductions and experiments—and its application to some modern electrical problems. The second part shows how the principles are applied to wireless telegraphy.

Wireless Telegraphy and Telephony. By Domenico Mazzotto (Italian). Translated by S. R. Bottone (English). Published by Whittaker & Co., London. Price 6 shillings. 415 pages; 12 chapters; 253 illustrations.

A clearly written work on wireless telegraphy, covering the whole general scheme, together with a chapter on the new art of wireless telephony.

Traité Elémentaire de Télégraphie et de Téléphonie sans Fil. By E. Ducretet (France). Published by R. Chapelot & Co., Paris, France. Price 3 francs. 89 pages; 7 chapters; 30 illustrations.

Principally devoted to a description of Capitaine E. Ducretet's wireless telegraph and telephone experiments.

Digitized by Google

Wireless Telegraphy. By S. W. de Tunzlemann (England). Published by "Knowledge," London. Price 3 shillings. 104 pages; 8 chapters; 30 illustrations.

A popular exposition of the principles of wireless telegraphy.

Wireless Telegraphy and Hertzian Waves. By S. R. Bottone (England). Price 3 shillings. 120 pages; 37 illustrations. 1900.

An attempt to set forth in simple language the elementary principles upon which wireless telegraphy depends.

The A B C of Wireless Telegraphy. By Edward Trevert. Published by Bubier Publishing Company, Lynn, Mass. Price 75 cents. 7 chapters; 20 illustrations.

A plain treatise on electric-wave signalling and the theory, method of operation, and construction of various pieces of the apparatus employed.

Wireless Telegraphy. By Gustave Eichhorn (Germany). Published by J. B. Lippincott Co., Philadelphia. Price $2.75. 116 pages; 11 chapters; 79 illustrations.

A mathematical treatise presenting the fundamental principles of electric-wave action as applied to the Telefunken system of wireless telegraphy.

Wireless Telegraphy: Its History, Theory, and Practice. By A. Frederick Collins of New York. Published by the McGraw Publishing Co. Price $3.00. 299 pages; 20 chapters; 323 illustrations.

The first systematized work in any language on the subject. Each chapter begins with a brief history of the individual subject; it is then treated theoretically and

Digitized by Google

mathematically; its experimental investigation follows, the chapter finally closing with the practical workings of the apparatus. The chapter on *Capacity, Induction,* and *Resistance* defines these terms and explains their effects on electrical oscillations; also how to calculate the constants of an aerial wire, and how to measure the capacity, inductance, and resistance values of aerial systems, all in simple and concise language.

The theory of the *Induction Coil* is fully treated, while a separate chapter tells how to build coils from a half-inch up to the largest sizes, giving sparks especially adapted to wireless transmission. Twenty-five different kinds of electric-wave detectors are explained and illustrated. The chapters on *Transmitters* and *Receptors* classify all the different makes of apparatus, and in such a way that the reader can instantly ascertain the characteristic features of any one of the numerous systems and wherein it is alike or different from those of any other make.

In the chapter on *Subsidiary Apparatus* each specific part of the complete equipment is minutely described and illustrated, except *Oscillators* and *Detectors*, since these are treated exhaustively in distinct chapters. For instance, nine different styles of keys are considered; three different types of condensers; high- and low-potential transformers; decoherers; relays, ordinary and polarized; indicators, including Morse registers, telephone receivers, and siphon-recorders; as well as tuning-coils, choking-coils, polarized

Digitized by Google

cells, screening boxes, and the alphabetic codes used in wireless.

Aerial Wires and *Earths*, *Resonance* and *Syntonization* are dealt with in separate chapters in all their phases, and this is the only work containing the history, theory, and practice of these hitherto little understood subjects. In conclusion, the last chapter is devoted to *Wireless Telephony*, and contains all the information, such as speaking arcs, selenium cells, etc., that was available when the book was written.

Making Wireless Outfits. By Newton Harrison. Published by Spon & Chamberlin. New York, 1909. A concise and simple explanation of the construction and use of an inexpensive wireless equipment for sending and receiving up to 100 miles. 61 pages.

Electric Waves. By W. S. Franklin. Published by The Macmillan Co., New York. An advanced treatise on alternating current theory.

Principles of Electric Wave Telegraphy. By J. A. Fleming. Published by Longmans, Green, & Co. London, 1908. The most comprehensive work yet published on wireless telegraphy. 671 pages, and many illustrations.

Elementary Manual of Wireless Telegraphy and Telephony. By J. A. Fleming. Published by Longmans, Green, & Co. 340 pages. For students and others.

Handbook of Wireless Telegraphy. By James Erskine-Murray. Published by Crosby, Lockwood & Son. London, 1907. Intended for those who are already acquainted with the fundamental theory and practice of wireless telegraphy. 318 pages.

Radio-Telegraphy. By C. C. F. Monckton. Published by D. Van Nostrand Company, New York. Devoted to the general practice and principles of wireless. 272 pages.

Plans and Specifications for Wireless Telegraph Sets. By A. Frederick Collins. Published by Spon & Chamberlin. New

Digitized by Google

York, 1912. In four parts. A practical book. Gives detailed description and full working drawings for five different sizes of wireless telegraph sets, which are capable of covering distances of from ¼ mile to one hundred miles. The plans and specifications were drawn up under Mr. Collins' supervision and the apparatus was constructed for them in his Newark laboratory.

Digitized by Google

GLOSSARY OF WIRELESS TELEGRAPH WORDS, TERMS, AND PHRASES

Adjustable condenser. See Condenser.

Aerial. A word much used instead of the longer term *aerial wire.*

Aerial switch. A switch used to throw the aerial wire into connection with the spark-gap and out of connection with the detector, and vice versa.

Aerial wire. The wire suspended from a mast, kite, or balloon, and connected with the spark-gap when sending and the detector when receiving. When sending it is often termed a *sending wire;* also a *radiator.* When receiving it is sometimes termed the *receiving wire* or *receiving aerial;* also an *antenna.* It may be termed a *vertical wire,* whether sending or receiving. If formed of one or two parallel wires it is termed a *plain aerial;* if more than two parallel wires a *grid;* then there is the *fan-shaped aerial, cylindrical, inverted pyramid,* and *rectangular* aerials. Aerials are usually, but not always, open circuit, that is they are insulated from everything and end abruptly at the top. A *closed-circuit aerial* indicates that it forms a loop at the top.

Air-gap. Wherever a high-tension circuit is broken and the connection is made by a high-potential discharge sparking across the gap the space is termed an *air-gap* or a *spark-gap.* Such an arrangement is used to cut out the transmitter from the receiving aerial, so that the received energy may not be dissipated in the sending circuits.

Alternations. A current that changes its direction slowly, as produced by a commercial alternating generator, is termed an *alternating current;* a current that surges through a circuit with

Digitized by Google

high frequency is called an *oscillating current;* while a charge moving to and fro rapidly enough to produce light is termed a *vibration.*

Anode. The point or path by which a direct current enters the electrolyte or other medium; it is the positive pole of the spark-gap, but is used chiefly to indicate the fine point of an electrolytic detector or the smaller terminal of an electrolytic interruptor. The negative electrode is called the *cathode.*

Antenna. The receiving aerial—never the sending aerial; so called from the feelers attached to the heads of insects, to which it is likened in reaching out and receiving the electric impulses.

Barretter. A name given by Fessenden to his electrolytic detector.

Battery. Three kinds of batteries are used in wireless telegraphy: i.e. (1) *dry batteries,* (2) *storage batteries,* and (3) *Leyden-jar batteries.* 1 is used in the receiving circuit in connection with the tapper and Morse register; 2 is sometimes used to supply the initial energy for operating the induction coil, and 3 in the high-tension circuit of the transmitter.

Battery circuit. Usually refers to the internal circuit of a receptor, which includes the tapper and Morse register.

Bridle. A cord attached to a kite that holds the latter at the proper angle in the wind; the kite-cord is attached to the bridle.

Brush discharge. See Discharge.

Buzzer. A vibrating arrangement like an electric bell, but without the gong. The testing-box for the coherer is often called a *buzzer.*

Capacity. Any object that possesses the property of being charged with electricity; hence an aerial wire, a condenser, or a metal plate are called capacities for short when this is meant.

Capacity cage. A cylindrical cage made of wire and placed at the top of the aerial wire to give it additional capacity.

Cathode. The negative terminal of an electrolytic detector or an electrolytic interruptor; it is always the larger terminal in these instances. See Anode.

Circuit. Any electrical conductor through which a current can flow. A low-voltage current requires a loop of wire or other conductor, both ends of which are connected to form a continuous circuit;

Digitized by Google

this is termed a *closed circuit.* When the current is oscillatory it will surge through a wire open at both ends; this is an open circuit. Where a closed circuit and an open circuit are coupled together they form a *compound circuit.* When the closed and the open circuits are joined directly together they form a *close-coupled circuit;* when they are joined through a transformer-coil they form a *loose-coupled circuit.*

Circuit. The primary circuit of the transmitter and the circuit of the receptor containing the dry battery are sometimes called *battery circuits;* also *low-voltage circuits;* also *local circuits;* also *internal circuits.*

Circuits. The open and closed circuits in which the oscillations of the transmitter and the receptor surge are termed *high-tension circuits;* also *external circuits.* The high-tension circuits of the sender form the *oscillation circuits,* called for short the *oscillator;* the aerial-wire system of the receiver is termed the *resonator circuit* or merely the *resonator.*

Circuits. A *parallel circuit* is one in which a number of circuits have all their positive poles connected together; also termed a *multiple circuit.* A *series circuit* is one through which the current passes without being divided; a continuous circuit. A *shunt circuit* is a branch or additional circuit through which a portion of the main current passes.

Closed circuit. See Circuit.

Compound circuit. See Circuit.

Close-coupled circuit. See Circuit.

Condenser. All conducting objects with their insulation form capacities, but a condenser is understood to mean two sheets or plates of metal placed closely together, but separated by some insulating material. (1) When paper is used as the dielectric it is termed a *paper condenser;* (2) where mica is used it is termed a *mica condenser;* and (3) where glass jars are coated inside and out with tinfoil it is termed a *Leyden-jar condenser,* or battery, because this kind was first made in Leyden, Germany. When the capacity of the condenser can be varied it is termed an *adjustable condenser.*

Convective discharge. See Discharge.

Digitized by Google

Discharge. (1) A faintly luminous discharge that takes place from the pointed positive terminal of an induction coil, or other high-potential apparatus, is termed a *brush discharge.* (2) A continuous discharge between the terminals of a high-potential and high-frequency apparatus is termed a *convective discharge.* (3) The sudden breaking-down of the air between the balls forming the spark-gap is termed a *disruptive discharge;* also termed an *electric spark;* also *spark,* which is even shorter.

Disruptive discharge. See Discharge.

Damping. The degree to which the energy of an electric oscillation is reduced or lessened. In an open circuit the energy is damped out very quickly, that is, in one or two swings; while in a closed circuit it is greatly prolonged, the current oscillating twenty times or more before the energy is dissipated.

Electrodes. Either of the ends or terminals immersed in the electrolyte of either an electrolytic interruptor or electrolytic detector. Occasionally the terminals forming the spark-gap are called electrodes.

Electric oscillations. A current of high frequency that surges through an open or closed circuit. (1) An electric oscillation may be set up by releasing a charged wire or other capacity by means of a disruptive discharge; under these conditions, oscillations not only have a high frequency, but a high potential. (2) When electric waves impinge on an aerial wire or other resonating system, they are transformed into electric oscillations of a frequency equal to those emitting the waves, but, owing to the very small amount of energy received, the potential is very low. (3) *Prolonged* or *sustained oscillations* are those in which the damping factor is small; *damped oscillations* are those that are quickly transformed into electric waves. See Damping.

Electric spark. See Discharge.

Electric waves. When an electric oscillation surges through a wire, some of its energy is transformed into waves in the ether, very much as an ordinary electric current is converted into magnetic lines of force (see Electric oscillations). (1) *Free electric waves* are waves that are not guided by the conducting medium of either metallic conductors or the earth's surface. (2) *Sliding*

Digitized by Google

electric waves are waves that slide along wires or the earth's surface. (3) *Trains of electric waves* are a series of waves sent out by constantly recurring electric oscillations due to a succession of electric sparks.

Earth. A word used to indicate the place in which the aerial-wire system forms a connection with the earth.

Earthed terminal. The wire connecting the plate buried in the earth and the aerial wire; also used to indicate the wire with the plate attached; also called a *ground*, also *earthed connection.*

External circuit. See Circuit.

Earth-plate. A sheet of metal or wire-netting used to form a contact with the earth or water for the aerial-wire system.

Feeble oscillations. See Oscillations.

Frequency. The number of reversals of an electric current per second. (1) A *low-frequency current* usually implies an alternating current of commercial frequency. (2) A *high-frequency current* indicates a frequency which can only be obtained by a disruptive discharge.

Ground. Used instead of "earth." See Earth.

Hertzian waves. Same as electric waves; so called after Hertz, who discovered them.

High frequency. See Frequency.

High potential. See Potential.

High pressure. See Potential.

High tension. See Potential.

High voltage. See Voltage.

Inductance. The characteristics of a circuit which cause the magnetic induction of a current to accentuate the value of its electromotive force. It is the inductance of a circuit that retards or holds back a current on making the circuit, and gives it increased momentum on breaking the circuit which produces the "extra-current" effect. *Self-induction* is the inductive effect of a current acting on itself that causes its electromotive force to rise with an increasing or decreasing magnetic field.

Inductance coil. A coil of wire used to provide additional inductance for the aerial-wire system. *Variable inductance coil* is a coil

Digitized by Google

arranged with plugs or clips, so that the value of inductance may be changed.

Induction. See Mutual Induction.

Interference. The crossing of two trains of electric waves that tends to diminish or increase the intensity of the other. It is the untoward interference between electric waves from different stations that makes selective signalling so difficult a problem.

Internal circuit. See Circuit.

Jigger. A name given by Marconi to a small oscillation-transformer

Juice. A vulgar word much used by operators and others for electric current.

Kinetic. In motion or active; opposed to static or stored-up energy; an electric current is kinctic; a charge is static.

Leyden-jar battery. Two or more Leyden jars coupled together.

Local circuit. See Circuit.

Loose-coupled circuit. See Circuit.

Low frequency. See Frequency.

Low potential. See Potential.

Low tension. See Potential.

Low voltage. See Voltage.

Maximum. The greatest quantity, amount, or degree attainable.

Mica. A mineral that may be split into thin transparent or translucent sheets, forming a most excellent insulation; sometimes called *isinglass*.

Micanite. A compound having mica for a basis; it can be moulded into any form or shape desired. Largely used for insulating tubes between the primary and secondary of induction coils.

Minimum. The smallest quantity, amount, or degree attainable.

Mutual induction. Induction produced between two circuits in proximity with each other by the mutual interaction of their magnetic fields.

Non-inductive resistance. A coil of wire wound double, starting with the loop; such a coil possesses resistance but not inductance. See Resistance.

Ohmic resistance. See Resistance.

Open circuit. See Circuit.

Digitized by Google

Oscillation. See Electric Oscillation.

Oscillator. A circuit designed especially for oscillating currents.

Oscillator balls. The balls of the spark-gap.

Oscillation circuit. See Oscillator

Parallel circuit. See Circuit.

Period. The time that elapses between two successive phases of an oscillation.

Plain aerial. See Aerial.

Potential. Electrical energy under pressure but not in motion. Ordinary or *low potentials* are those at the terminals of commercial generators; *high potentials* are produced by induction coils and similar devices. The word *tension* is used synonymously with *potential*. See Voltage.

Radiator. The aerial wire when connected with the sending apparatus.

Radiator system. The aerial-wire system and other high-tension circuits of a transmitter.

Rat-tail. The wire connecting the aerial wire with the sending or receiving apparatus.

Receiving aerial. See Aerial.

Receptor. A term proposed by the author for the entire receiving apparatus; the purpose was to differentiate the receiving apparatus as a whole from the telephone receiver, which is more often called simply a *receiver*.

Resistance. That property of an electric circuit which opposes or resists the passage of an electric current. The *ohmic resistance* of a circuit equals the electromotive force divided by the current. See Non-inductive Resistance.

Resonator. The aerial-wire system and other high-frequency circuits of a receiving apparatus; also *resonating system*.

Rheostat. A resistance to cut down the current; an *adjustable resistance* is one that can be varied within certain limits.

Ruhmkorff coil. Same as induction coil; so called from Ruhmkorff, who built the earliest practical coils.

Selective. When two or more messages sent at the same time can be received without interference, the systems are said to be selective. See Interference; Tuning; Syntonic.

Digitized by Google

Shunts. Resistances for altering the sensitivity of a hot-wire ammeter or other instrument.

Spark. See Discharge.

Spark-balls. Same as oscillator-balls.

Spark-gap. The space between the terminals of the secondary of an induction coil where the disruptive discharge or spark takes place.

Static. Electricity at rest; opposed to kinetic.

Striking distance. The distance the spark passes between the oscillator-balls.

Syntonic. When a sending and a receiving station are each adjusted to a certain wave-length, they are said to be *syntonized*, or in *syntony* with each other; as, a *syntonic system.* See Tuned; Selective.

System. The connection or manner of arrangement of parts of the sending and receiving apparatus as related to the whole, or the parts so related collectively, as the aerial-wire system.

Time-constant. (1) The time counted from the instant of closing an electric circuit which the current requires to rise to about $\frac{2}{3}$ of its maximum value. (2) The time required for the charge of a condenser, or other capacity to fall to about half its maximum value. (3) *High time-constant:* when the time required for a certain function of either electrical or mechanical action takes longer than half of its mean time. Any constant movement that is relatively slow is said to have a high time-constant. (4) *Low time-constant:* when the time required for a given function of either electrical or mechanical action takes less than half of its mean time; any constant movement that is relatively rapid is said to have a low time-constant.

Transformer. A primary and secondary coil for stepping up or down a primary alternating current. The term *induction coil* is used to mean a coil using a direct primary current, and converting this into alternating currents of higher potential by means of an interruptor (see Induction Coil). A transformer requires no interruptor, since the initial current is alternating.

Tuning. When the open and closed oscillation circuits of a transmitter or receptor are adjusted so that both will permit the

Digitized by Google

electric oscillations to surge through them with the same frequency, they are said to be *tuned*. *Tuning* refers only to the adjustment of the sending circuits, or of the receiving circuits, while *syntonization* refers to the adjustment of the sending to the receiving circuits.

Unidirectional discharge. See Discharge.

Variable inductance coil. See Inductance Coil.

Vertical wire. See Aerial.

Value. The amount or quantity or magnitude or number.

Vibrations. The exceedingly rapid succession of to-and-fro movements over the same path. Light-waves are vibrations of the ether. Oscillations are much slower than vibrations, and alternations are very slow compared to oscillations.

Voltage. The electromotive force expressed in volts.

Digitized by Google

Digitized by Google

INDEX

A

PAGE

Abstract Sheets 238
Accumulator, Chloride 44
Acknowledgment of Receipt 232
Action of Apparatus 139
Action of a Coherer 153
Condenser 142
Conductive-coupled Receiving System 150
Sending System 146–148
Crystal Detector 155
Electrolytic Detector 154
Induction Coil 139
an Inductive-coupled Receiving System 151
a Magnetic Detector 155
Morse Register 153
a Polarized Relay 153
Receiving System 150
Simple Sending System 144
Tapper 153
Transformer 142
Adjustable Condenser, for Sending 43
Leyden-jar Condenser 57
Spark-gap 56
Adjusting Aerial Wire to Emit a Given Wave-length 163
the Coherer 169
an Electrolytic Interruptor 159
a Mercury Turbine Interruptor 158
the Morse Register 170

Digitized by Google

PAGE
Adjusting and Operating the Instruments 157
the Relay 169
Spark-gap 160
a Spring Interruptor 158
the Tapper 170
Adjustment of Crystal Detector Receptor 174
Electrolytic Detector Receptor 173
Instruments in the Primary Circuit 158
Magnetic Detector Receptor 174
Receiving Instruments 169
Aerial, Electric Oscillations in an 30
Horizontal Flat-top, or T 82
Hot-wire Ammeter in 161
Oblique 82
Portable 85
on S.S. Imperator 85-87
Straight Vertical 82
Switch 60
Suspension by Balloons 101
Umbrella 85-89
Wire 81
to Emit a Given Wave-length, Tuning the 162
System 79
Capacity of 81
Coherer and Relay Circuits, Wiring Diagram of 126
Changing the 38
Wires and Grounds for Field Work 101
Aerials, Aluminum Wire for Field 101
for Field Work 101
Types of 82
Airships, Wellman's Equipped with Marconi Apparatus 189
All Correct 226
Alphabetic Codes, Learning the 175
Alternating Current 22-45
Produced by Induction Coil 23
Aluminum for Detectors 75
Wire for Field Aerials 101
Ammeter 47
Hot-wire 43, 61, 160

Digitized by Google

PAGE

Analogue, Hydraulic, of Alternating Current 22
of Direct Current 20
of Tuned Oscillation Circuits 40
Anchor Gap 61
Apparatus in Action 139
of a Commercial Station 44
Arc Lamp, Oscillation 245–248
Army Enlistment Circular 220
Auto-detector Receptor, Commercial 71
Diagram of Simple 6–8
Experimental 14
Variable Condenser for 73

B

Balloons for Aerial Suspension 101
Battery of Leyden-jars 43
Storage 44
Books on Wireless Telegraphy, List of 261
Box Kites 101
Braun-Siemens and Halske's system 193
Brush Discharge 27
Buzzer 70

C

Call Book, Wireless 243
Calling of Stations 228
Capacity 30–38
of Aerial Wire System 81
Unit of 39
Carborundum for Auto-detector Receptor 16, 74
Care of a Morse Key 159
Spring Interruptor 159
Cells, Dry 69
Edison 44
Polarized 68

Digitized by Google

PAGE
Chalcopyrite 74, 75
Charges, Electric 36
Charging Aerial Wire System 39
and Counting, American and Canadian 237
Chart for Locating Ships in the Atlantic Ocean 215
Checking of Cipher Messages 233
Chloride Accumulator 44
Choke Coils 68
Cipher Messages 235
Checking of 233
Circuit Connections for Receptors 121
Inductance of 39
Resistance of Oscillation 37
Circuits, Closed Oscillation 40
Conductively-coupled Oscillation 41
Constants of Oscillation 37
Diagram of Conductive-coupled Oscillation 114
Inductive-coupled Oscillation 115
Primary for Transmitters 114
Inductively-coupled Oscillation 42
Open Oscillation 40
Tuning Oscillation 43
Wiring Diagram of Internal 131
Clear Signal 225
Closed Core Transformer 54
Oscillation Circuits 40
Code Messages 235
Codes, Learning the Alphabetic 175
Wireless Telegraph 176
Coherer, Action of a 153
Adjusting 169
Aerial Wire System and Relay Circuits, Wiring Diagram of 126
How to Make a Simple 10
Marconi 63
Receptor, Commercial 63
Diagram of a Simple 4
Receptor, Experimental 10
Tuning a 167
Coil, Induction 47

Digitized by Google

PAGE
Coils, Choke ... 68
Collins Revolving Oscillation Arc ... 250
Wireless Telephone Transmitter ... 254
Completion of Translation ... 225
Compound Words ... 236
Condenser ... 48
Action of ... 142
Adjustable Leyden-jar ... 57
for Sending ... 43
Glass Plate ... 58
High Tension ... 58
for Induction Coil ... 52
Receiving ... 65–78
of Fixed Value ... 75–76
for Simple Auto-detector Receptor ... 15
Variable, for Receiving ... 76
Conductively-coupled Oscillation Circuits ... 41
Receiving System, Action of ... 150
Resonator, Diagram of ... 124
Sending System, Action ot ... 146
Constants of Oscillation Circuits ... 37
Construction of Induction Coil ... 48
Masts ... 91
Continental Wireless Telegraph Code ... 181
Convective Discharge ... 27
Copies of Messages ... 232
Counting and Charging, American and Canadian ... 237
Coupled Oscillation Circuits ... 40, 112–115
Crystal Detectors ... 74
Detector, Action of a ... 155
Detector Receptors ... 74
Adjustment of ... 174
and Electrolytic Detectors, Wiring Diagrams for Receptors with ... 135
Crystals ... 74
for Auto-detectors ... 16
Current, Alternating ... 22–45
Direct ... 20–45
High Potential ... 27
Hydraulic, Analogue of Direct ... 20

Digitized by Google

PAGE

Current, Sources of 44
Unidirectional 37

D

Damped Electric Waves 245
Damping of Oscillations 37
De-coherers 67
Detector, Action of a Crystal 155
an Electrolytic 154
a Magnetic 155
Carborundum for Auto- 16
and Cell Circuit Diagram 122
Electrolytes for 76
Frame 75
Iron Pyrite for Auto- 16
Magnetic 71
Perikon 75
Receptor, Adjustment of Crystal 174
Electrolytic 173
Magnetic 174
Receptors, with Crystal 74
Electrolytic 76
Magnetic 71
Silicon for Auto- 16
Simple, for Auto-receptor 15
Wiring Diagram for Receptor with Magnetic 132
Wollaston Wire for 77
Detectors, Metals for 74
Diagram of Action of a Conductive-coupled Receiving System 151
Sending System 147
an Inductive-coupled Receiving System 152
Sending System 149
a Simple Sending System 145
Conductive-coupled Resonator 124
Oscillation Circuits 114
Elementary of Detector and Cell Circuit 122
of Inductive-coupled Oscillation Circuits 115
Resonator 124

Digitized by Google

PAGE

Diagram of Primary Circuits for Transmitters 114
a Simple Auto-detector Receptor 6–8
Coherer Receptor 4
Induction Coil Transmitter 112
Open-circuit Resonator 122
Transformer Transmitter 112
Transmitter 2
Wiring of Aerial Wire System, Coherer and Relay Circuits 126
Complete Receptor 132
for Induction Coil with Electrolytic Interruptor, 110
Independent Interruptor, 107, 108
Interruptor and Condenser... 106, 107
with Mercury-turbine Interruptor 109
of Internal Circuits 131
for Marconi Transmitter 118
Receptor 121
of Relay Connections 126
for Receptor with Magnetic Detector 132
Receptors with Electrolytic and Crystal Detectors 135
Telefunken Transmitter 116
Transmitters 105
Direct Current 20–45
Produced by Primary Cell 21
Discharge, Brush 27
Convective 27
Disruptive 24–27
through Large Resistance 37
Small Resistance 38
Disruptive Discharge 24–37
Distance, Conditions Governing 80
Law of Signalling 80, 81
Distress Signals 224–242
Dry Cells 69

Digitized by Google

E

PAGE

Eddy Kites ... 101
Edison Cells ... 44
Electric Charges ... 23, 36, 38
Discharge through Large Resistance ... 37
Small Resistance ... 38
Free Wave Theory ... 32
Oscillations ... 27
in an Aerial ... 30
Analogue of ... 27
Frequency of ... 30
How Produced ... 29
Sparks ... 24
Waves ... 24–30
Damped ... 245
Free ... 33
Law of ... 31
Length of ... 35
Means for Producing ... 244
Propagation of ... 31
Sliding ... 34
Sustained ... 245
Electrolyte ... 52
Electrolytes for Detector ... 76
Electrolytic and Crystal Detectors, Wiring Diagrams for Receptors with ... 135
Detector Receptor ... 76
Adjustment of ... 173
Interruptor ... 27, 48, 50
Adjusting an ... 159
Electrose Insulators ... 96
Elementary Diagram of Detector and Cell Circuit ... 122
Theory of Wireless ... 19
End of Work ... 224
Equipment, Makes of ... 177
Ether ... 24–35
Weight of ... 35
Experimental Auto-detector Receptor ... 14
Coherer Receptor ... 10

Digitized by Google

PAGE
Experimental Half-inch Induction Coil 8
Transmitter 8

F

Farad, Unit of Capacity 39
Field Aerials, Kites for 101
Flat-top Aerial 82
Free Electric Waves 33
Frequency of Electric Oscillations 30

G

General Information for Operators 210
Generator for High Frequency Currents 245
Glass Plate Condenser 58
Glossary of Wireless Words, Terms and Phrases 271
Ground, How to Make a Good 96
Grounds 96
and Aerial Wires for Field Work 101
for Field Work 103

H

Henry, Unit of Inductance 39
High Frequency Generator 245
Grade Suspension 95
Potential Currents 27
Horizontal Aerial 82
Hot-wire Ammeter 43, 61, 160
in Aerial 161
How are Signals? 226
Hydraulic Analogue of Alternating Current 22
of Direct Current 20

Digitized by Google

I

PAGE

Impedance Coil 56
Inductance 30–39
of a Circuit 39
Coil for Conductive-coupled Circuits 58
Inductive-coupled Circuits 58
Variable 43-58
Coils 58
Unit of 39
Induction Coil, Action of 139
Construction of 48
Condenser 52
with Electrolytic Interruptor, Wiring Diagram for . 110
Half-inch, Experimental 8
with Mercury-turbine Interruptor, Wiring Diagram for 109
Ten-inch 47
Transmitter, Diagram of 112
Wiring Diagram for 106, 107
Independent Interruptor 107
Self- 39
Inductive-coupled Resonator, Diagram of 126
Receiving System, Action of 151
Sending System, Action of 148
Inductively-coupled Oscillation Circuits 42
Inductor 48
Infra-red Radiation 36
Instructions for Naval Operators 239
Instruments, Adjusting and Operating the 157
Adjustment of Receiving 169
Receiving Commercial 63
in the Primary Circuit, Adjustment of 158
Sending 44
Insulators, Electrose 96
Strain 93
International Signalling Code 224
Interruptor, Adjusting an Electrolytic 159
a Mercury-turbine 159
Spring 158

Digitized by Google

PAGE

Interruptor, Care of a Spring 159
Electrolytic 27, 48–50
Independent Spring 107
Mercury-turbine 48, 50, 109
Purpose of 142
Vibrating Spring 48
Interruptors 48
Iron for Detectors 75
Pyrites 74
for Auto-detector Receptor 16

K

Key for Auto-detector Receptors 46
Coherer Receptor 45
with Condenser 45
Magnetic Blowout 46, 116
Keys with Condensers 110
Morse 45, 110
with Oil Breaks 112
Kites, Blue Hill Box 101
Eddy Malay 101
for Field Aerials 101

L

Law of Electric Waves 31
Leading-in Insulator 95
Method 96
Learning the Alphabetic Codes 175
Length of Electric Waves 35
Leyden-jar Battery 43
Charge of a 23
Condenser, Adjustable 57
Light Waves 36
List of Books on Wireless Telegraphy 261
Type of Apparatus Used in U. S. Navy 216
U. S. Army Stations 217
Navy Ships and Shore Stations 217

Digitized by Google

PAGE
Locating Ships in the Atlantic Ocean 215
Logs 238
Low-voltage Meters 47

M

Magnetic Detector 71
Action of 155
Receptor 71
Adjustment of 174
Tuning Coil 72
Makes of Equipment 177
Malay Kites 101
Marconi Company Offices 216
Magnetic Detector Receptor 187
Stations along the Atlantic Seaboard 214
Transmitter, Wiring Diagrams for 118
Wireless Telegraph System 179
Maritime Intelligence 232
Masts 86
Construction of 91
Portable 92
Rigging for 91
U. S. Navy 91
Mercury-turbine Interruptor 48, 50, 109
Adjusting a 158
Message, Order of a 226
Messages, Charging for 235
Checking of Cipher 232
in Cipher 235
in Code 235
Not Accepted for Transmission 236
Numbering of 226
in Plain Language 235
Regulations for Public 234
Reply to a Service 225
Timing 227
Transmission of 228
Wording of 235

Digitized by Google

PAGE
Metals for Detectors 75
Meters, Low Voltage 47
Microfarad 39
Millihenry 39
Molybdenum for Detectors 75
Morse Alphabetic Code 178
Keys 45
Care of 159
Register, Action of 154
Registers 45, 67

N

Naval Operators, Instructions for 239
Navy Wireless Telegraph Code 179
Non-inductive Resistance 64
Numbering of Messages 226

O

Oblique, Aerial 82
Ohm, Unit of Resistance 38
Oil-cooled Transformer 56
Open-core Transformer 54
Open-oscillation Circuits 40
Operating and Adjusting the Instruments 157
Room, Size of 98
Operators, Instructions for Naval 239
Service Regulations for 223
Suggestions to 210
Order of a Message 226
Oscillation Arc Lamp 245–248
Circuits 40
Analogue of Tuned 40
Closed 40
Conductively-coupled 41
Constants of 37
Diagram of Conductive-coupled 114

Digitized by Google

PAGE
Oscillation Circuits, Diagram of Inductive-coupled 115
Inductively-coupled 42
Open 40
Resistance of 37
Tuning 43
Transformer 42–58
for Receiving 78
Oscillations, Analogue of 27
Damping of 37
Electric 27
in an Aerial 30
Frequency of 30
How Produced 29
Oscillator System 31

P

Perikon Detector 75
Phosphor-Bronze for Detectors 75
Platinum Wire for Detector 77
Polarized Cells 68
Relay 65
Action of 153
Portable Aerial 85
Mast 92
System, Signal Corps, U. S. A 194
Positions, Where to Apply for 218
Practical Application of the Arc to Wireless Telephony 249
Primary Coil 48
Priority 226
Propagation of Electric Waves 31
Radiations, Infra-red 36
Ultra-violet 36

R

Rates for Wireless Messages 212
Ratio of Transformation 142
Reactance Coil 56

Digitized by Google

PAGE

Receivers, Telephone 76
Receiving Instruments 63
Adjustment of 169
Condenser 78
Fixed Value 75–76
Variable 73
System, Action of 150
an Inductive-coupled 151
Conductive-coupled 150
Tuning Oscillation Transformer 78
Coil 76
Three Slide 64
Receptor, Adjustment of Crystal detector 174
Electrolytic Detector 173
Magnetic Detector 174
Carborundum for Auto-detector 16
Circuit Connections for 121
Commercial Auto-detector 71
Coherer 63
Condenser for Simple Auto-detector 15
Detector for Simple Auto 15
Diagram of a Simple Coherer 4
Auto-detector 6–8
Electrolytic Detectors 76
Experimental Coherer 10
Auto-detector 14
Iron Pyrites for Auto-detector 16
Magnetic Detector 71
Pony Relay for Experimental Coherer 12
Silicon for Auto-detector 16
Testing the 173
Tuning a Coherer 167
for Wireless Telephony 256
Wiring, Diagram for Magnetic Detector 132
Complete 132
Receptors with Crystal Detectors 74
with Electrolytic and Crystal Detectors, Wiring Diagrams for 135
Wiring, Diagram for 121
Register, Morse 45–67

Digitized by Google

PAGE
Regulations for Commercial Operators 223
in Public Messages 234
Relay, Adjusting the 169
Coherer and Aerial Wire System Circuits, Wiring, Diagram of 126
Connections, Wiring Diagram of 126
Polarized 65
Pony for Experimental Coherer Receptor 12
Testing Coil 69
Relays 65
Reply to a Service Message 225
Report, General 238
Technical 238
Reports 238
Request for Repetition 225
Resistance 30–37
Coil 56
Discharge through Large 37
Small 38
Non-inductive 64
of Spark-gap 37
Resonator, Diagram of Conductive-coupled 124
Inductive-coupled 124
Simple Open-circuit 122
Retransmission 224
Rheostat 56
Ruhmkorff Coil (see Induction Coil).

S

Secondary Coil 48
Self-induction 39
Sending Instruments 44
System, Action of a Conductive-coupled 146
Inductive-coupled 148
Simple 144
Signal Corps, U. S. A., Portable System 194
Signalling Distance 79, 224
Signals, Distress 242

Digitized by Google

PAGE
Signs and Prefixes 224
Silicon 74
for Auto-detector Receptor 16
Simple Coherer 10
Slide Tuning Coil 15
Wireless Telegraph System 1
Slaby-Arco System 193
Sliding Electric Waves 34
Half-wave Theory 32
Sources of Current 44
Spark-gap, Adjustable 56
Adjusting the 160
Resistance of 37
Spark-gaps 56
Sparks, Electric 24
Spring Interruptor 48
Station, Apparatus of a Commercial 44
Storage Battery 44
Strain Insulators 93
Suggestions to Operators 210
Suspension of Aerials 93
Balloons for Aerials 101
High Grade 93, 95
Simple Method of 93–94
Switch, Aerial 60
Systems of Wireless Telegraph 177

T

T Aerial 82–85
Tapper, Adjusting the 170
Action of 153
Tappers 67
Telefunken System 191
Transmitter, Wiring Diagram for 116
Telegraph Codes, Wireless 176
Telephone Receiver, Adjustable Head 74
Receivers 76
Tellurium for Detectors 75

Digitized by Google

PAGE

Testing the Receptor 173
Box 70
Coil for Relay 69
Theory of Electric Oscillations 27
Free Electric Waves 31
Oscillation Arc 251
Sliding Half Waves 32
Wireless, Elementary 19
Timing Messages 227
Trans-atlantic Cableless Station at Glacé Bay 207
Transformation, Ratio of 142
Transformer 54
Action of 142
Closed-core 54
Oil-cooled 56
Open-core 54
Oscillation 42
for Receiving, Oscillation 78
Transmitter, Diagram of Simple 112
Transmission of Messages 228
Transmitter, Diagram of a Simple 2
Diagram of Simple Transformer 112
Induction Coil 112
Experimental 8
Tuning a Coupled 160
Wireless Telephone 246
Wiring Diagram for Marconi 118
Wiring Diagram for Telefunken 116
Transmitters, Diagram of Primary Circuits for 114
Tuning Device for 164
Wiring Diagrams for 105
Tuned Oscillation Circuits, Analogue of 40
Tuner 69
Tuning the Aerial Wire to Emit a Given Wave Length 162
a Coherer Receptor 167
Coil for Conductive-coupled Circuits 58
Inductive-coupled Circuits 58
Magnetic Detector Receptor 72
Receiving 76
Simple Auto-detector Receptor 15

Digitized by Google

PAGE

Tuning Coil, Three-slide Receiving 64
Two-slide 73
Variable 59
Coils 58
a Coupled Transmitter 160
Device for Transmitters 164
Oscillation Circuits 43
Transformer for Receiving 78
Types of Aerials 82

U

Ultra-violet Radiations 36
Umbrella Aerial 85–89
Unidirectional Current 37
Unit of Capacity 39
Inductance 39
United System 206

V

Variable Condenser, for Auto-Detector Receptor 73
Receiving 76
Inductance Coil 43
Tuning Coil 59
Vertical Straight Aerial 82
Vibrators (see Interruptors) 48
Voltmeter 47

W

Wave-length, Tuning the Aerial Wire System to Emit a Given 162
Used by U. S. Navy 164
Waves, Damped Electric 245
Electric 24–30
Free Electric 33
Law of Electric 31
Length of Electric 35
Light 36

Digitized by Google

PAGE

Waves, Propagation of Electric 31
Sliding Electric 34
Sustained Electric 245
Theory of Sliding Half-Waves 32
Free Electric 31
Weight of Ether 35
Wellman's Airship Equipped with Marconi Apparatus 189
Wire, Aerial 81
for Detector 77
Wiring Diagram of Aerial Wire System, Coherer and Relay Circuits 126
Complete Receptor 132
for Induction Coil with Electrolytic Interruptor .. 110
Interruptor and Condenser .. 106–107
with Independent Interruptor. 107–108
Mercury-turbine Interruptor 109
of Internal Circuits 131
for Marconi Transmitter 118
Receptors 121
Electrolytic and Crystal Detectors .. 135
Magnetic Detector 132
of Relay Connections 126
for Telefunken Transmitter 116
Transmitters 105
Wireless Call Book 243
Class in Navy Yard School 201
Messages, Rates for 212
Telegraph Codes 176
Systems 177
System, Simple 1
Telephony 244
Words, Terms, and Phrases, Glossary of 271
Wollaston Wire for Detector 77
Wording of Messages 235

Z

Zincite 74

Digitized by Google

Digitized by Google

Digitized by Google

Digitized by Google

89060665502

b89060665502a

SPECIAL
COLLECTIONS

89060665502

B89060665502A

Digitized by Google